CUI Devices is now Same Sky! Learn More

MODEL: SD4-6-B | DESCRIPTION: SD 4.0 CARD CONNECTOR

FEATURES

- SD 4.0 card connector
- 18 pins
- push in / pull out
- surface mount
- 2.28 mm profile

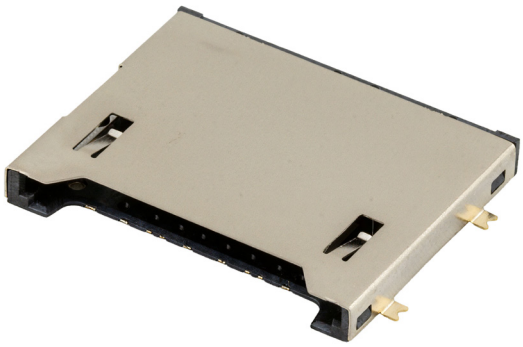

SPECIFICATIONS

parameter	conditions/description	min	typ	max	units
rated voltage				5	V
rated current				0.5	A
contact resistance[1]				100	mΩ
insulation resistance	at 500 Vdc, between adjacent circuits	1,000			MΩ
voltage withstand	for 1 minute, between adjacent circuits		500		Vac
insertion force				40	N
withdrawal force		0.5		40	N
life			10,000		cycles
operating temperature		-25		85	°C
flammability rating	UL94V-0				
RoHS	yes				

Note: 1. When measured at 20 mV / 100 mA.

SOLDERABILITY

parameter	conditions/description	min	typ	max	units
reel storage	at relative humidity 40~70% reel opened: use within 1 month reel unopened: up to 15 month shelf life	16	22	28	°C
reflow soldering	see reflow profile			250	°C

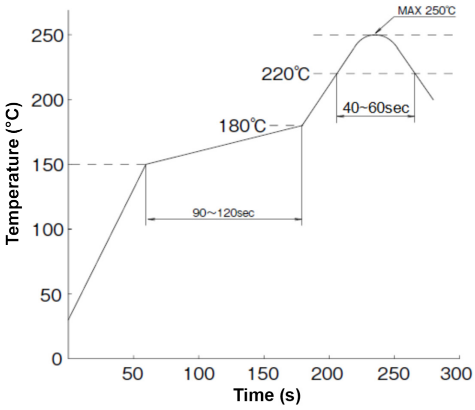

MECHANICAL DRAWING

units: mm
tolerance:
X.X ±0.35 mm
X.XX ±0.25 mm
X.XXX ±0.10 mm
unless otherwise specified

DESCRIPTION	MATERIAL	PLATING/COLOR
housing	LCP (UL94V-0)	black
contact terminals	C5210	contact area: 1 µ" gold over 50 µ" nickel solder area: 100 µ" min matte tin over 50 µ" nickel
cover	SUS304	solder area: 1 µ" gold over 50 µ" nickel

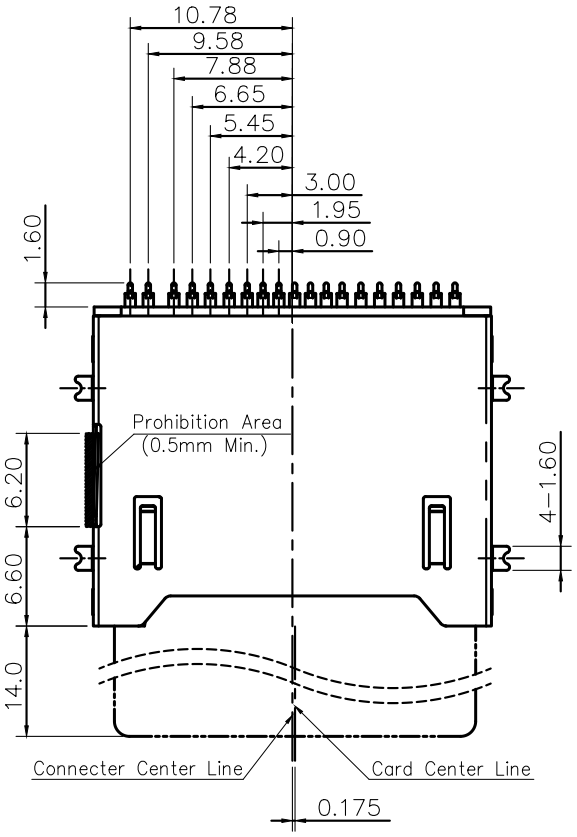

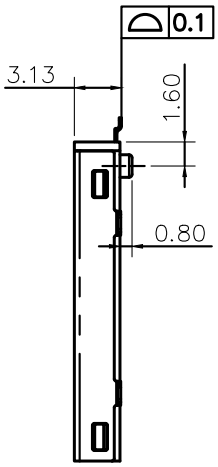

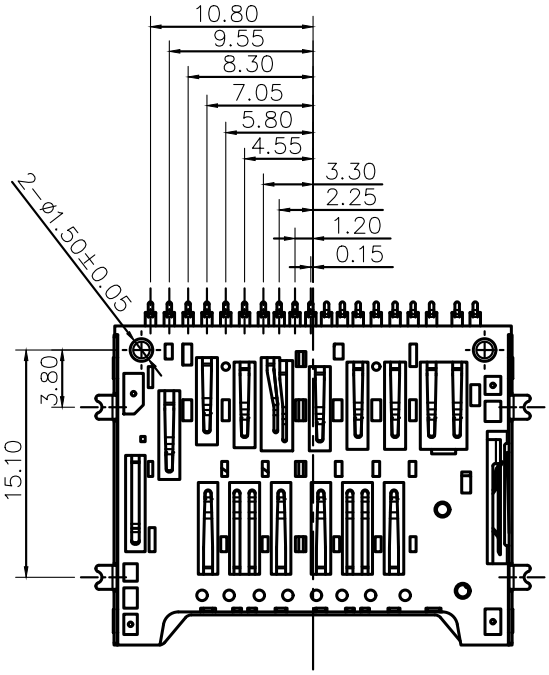

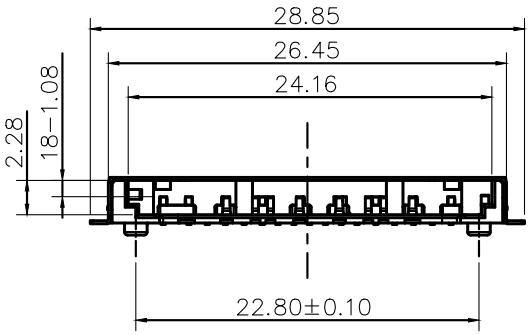

MECHANICAL DRAWING (CONTINUED)

units: mm
PCB tolerance: ±0.05 mm

PIN CONNECTIONS		
CONNECTOR PIN#	SIGNAL NAME	DESCRIPTION
P01	VSS3	SUPPLY VOLTAGE GROUND
P02	DAT2	DATA LINE (BIT 2)
P03	D0+	DEFERENTIAL DATA 0+
P04	CD/DAT3	CARD DETECT/DATA LINE (BIT 3)
P05	D0-	DEFERENTIAL DATA 0-
P06	CMD	COMMAND/RESPONSE
P07	CD	CARD DETECT
P08	VSS1	SUPPLY VOLTAGE GROUND
P09	VSS4	SUPPLY VOLTAGE GROUND
P10	VDD2	SUPPLY VOLTAGE (1.8 V)
P11	VDD1	SUPPLY VOLTAGE (3.3 V)
P12	D1-	DEFERENTIAL DATA1-
P13	CLK	CLOCK
P14	D1+	DEFERENTIAL DATA 1+
P15	VSS2	SUPPLY VOLTAGE GROUND
P16	VSS5	SUPPLY VOLTAGE GROUND
P17	DAT0	DATA LINE (BIT 0)
P18	DAT1	DATA LINE (BIT 1)
P19	WP	WRITE PROTECT

CARD STATUS		
WITHOUT CARD	CARD INSERTED WRITE PROTECT LOCK	CARD INSERTED WRITE PROTECT UNLOCK
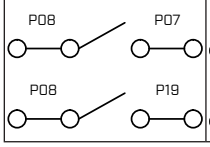	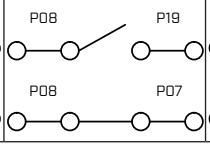	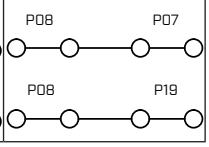

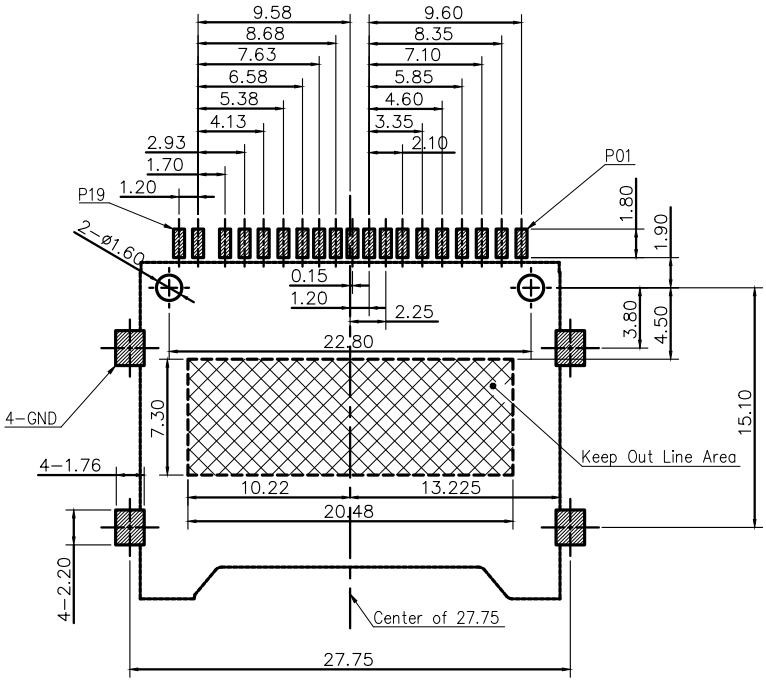

Recommended PCB Layout
Top View

PACKAGING

units: mm

Reel Size: Ø330 mm
Reel QTY: 380 pcs per reel

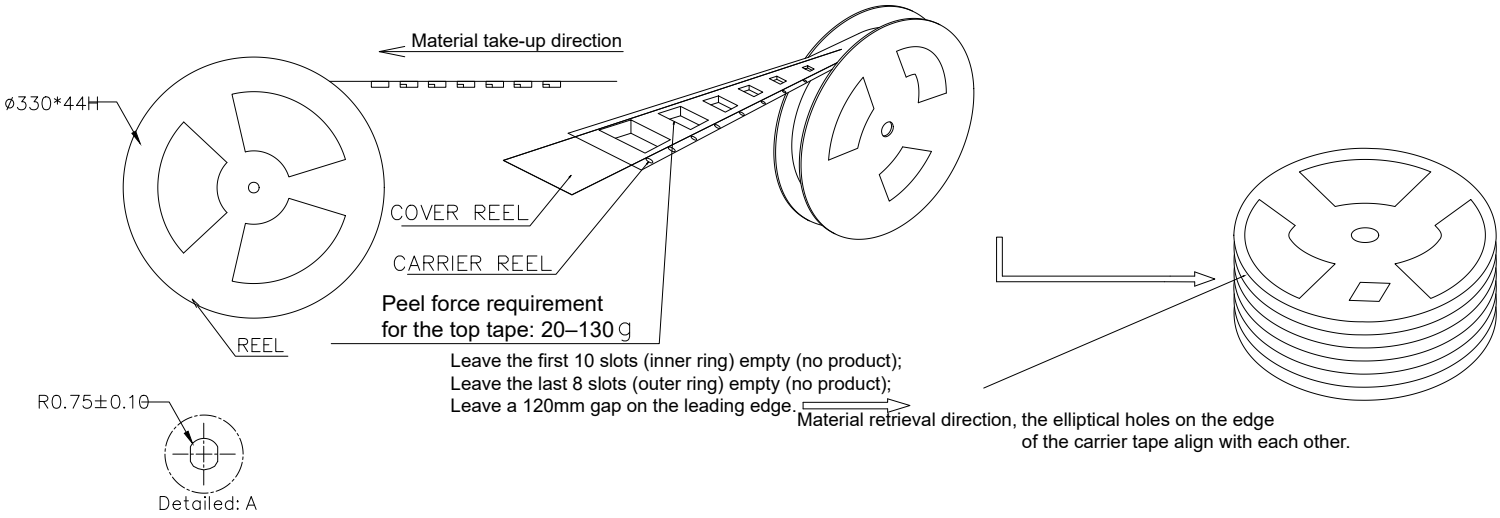

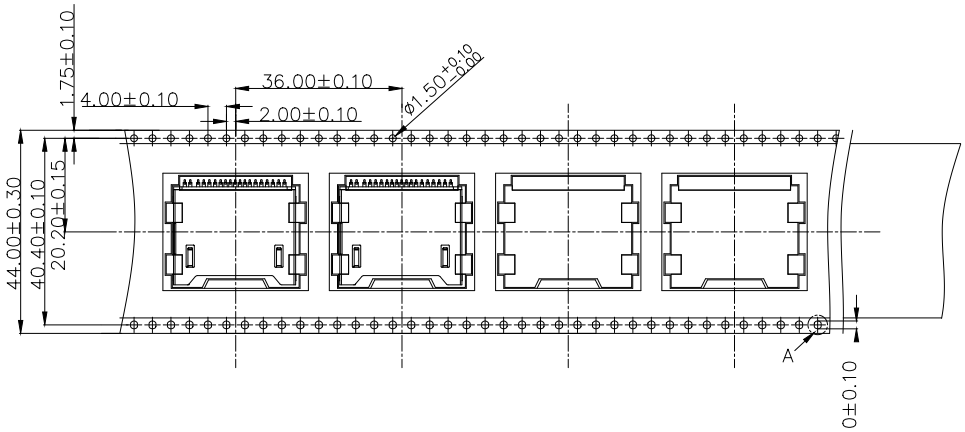

REVISION HISTORY

rev.	description	date
1.0	initial release	10/06/2026

The revision history provided is for informational purposes only and is believed to be accurate.

Same Sky offers a one (1) year limited warranty. Complete warranty information is listed on our website.

Same Sky reserves the right to make changes to the product at any time without notice. Information provided by Same Sky is believed to be accurate and reliable. However, no responsibility is assumed by Same Sky for its use, nor for any infringements of patents or other rights of third parties which may result from its use.

Same Sky products are not authorized or warranted for use as critical components in equipment that requires an extremely high level of reliability. A critical component is any component of a life support device or system whose failure to perform can be reasonably expected to cause the failure of the life support device or system, or to affect its safety or effectiveness.