CUI Devices is now Same Sky! Learn More



# MODEL: NSIM-22-B | DESCRIPTION: NANO SIM CARD CONNECTOR

## FEATURES

- nano SIM card connector
- 6 pins
- push in/pull out
- surface mount
- 1.1 mm profile

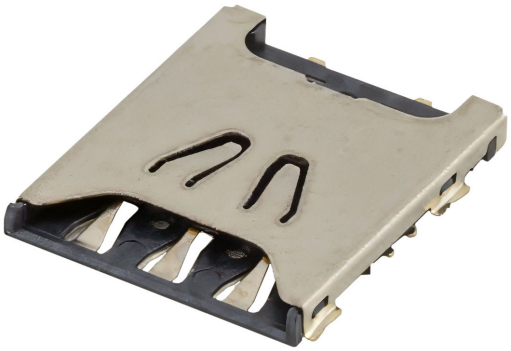

## SPECIFICATIONS

| parameter | conditions/description | min | typ | max | units |
|---|---|---|---|---|---|
| rated voltage | | | | 5 | V |
| rated current | | | | 0.5 | A |
| contact resistance[1] | | | | 100 | mΩ |
| insulation resistance | at 500 Vdc, between adjacent circuits | 1,000 | | | MΩ |
| voltage withstand | for 1 minute, between adjacent circuits | | 500 | | Vdc |
| insertion force | | | | 40 | N |
| withdrawal force | | 0.5 | | 40 | N |
| life | | | 5,000 | | cycles |
| operating temperature | | -20 | | 60 | °C |
| flammability rating | UL94V-0 | | | | |
| RoHS | yes | | | | |

Note: 1. When measured at 20 mV / 100 mA.

## SOLDERABILITY

| parameter | conditions/description | min | typ | max | units |
|---|---|---|---|---|---|
| reel storage | at relative humidity 40~70%<br>reel opened: use within 1 month<br>reel unopened: up to 15 month shelf life | 16 | 22 | 28 | °C |
| reflow soldering | see reflow profile | | | 250 | °C |

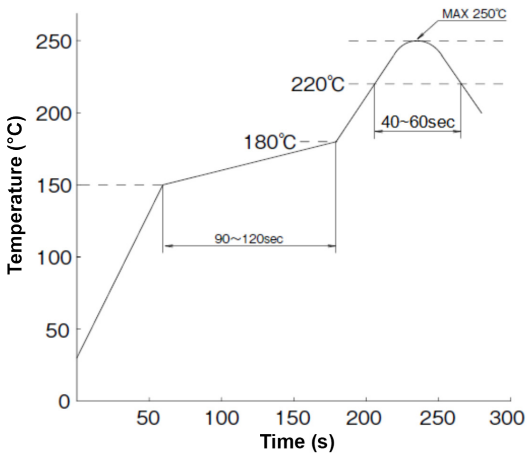

## MECHANICAL DRAWING

units: mm
tolerance:
X.X ±0.35 mm
X.XX ±0.25 mm
X.XXX ±0.10 mm
unless otherwise specified

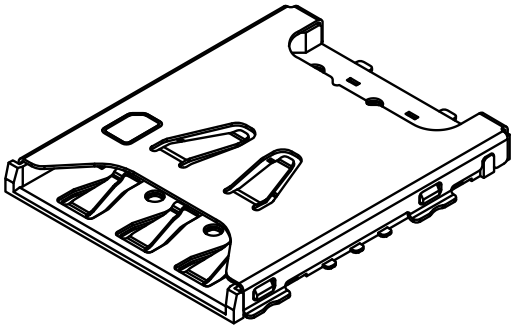

| DESCRIPTION | MATERIAL | PLATING/COLOR |
|---|---|---|
| housing | LCP (UL94V-0) | black |
| contact terminals | phosphor bronze t=0.08 mm | contact area: 1 µ" gold over 50 µ" nickel<br>solder area: 0.8 µ" min gold over 50 µ" nickel |
| shell | SUS304-H t=0.10 mm | solder area: 0.8 µ" gold over 50 µ" nickel |

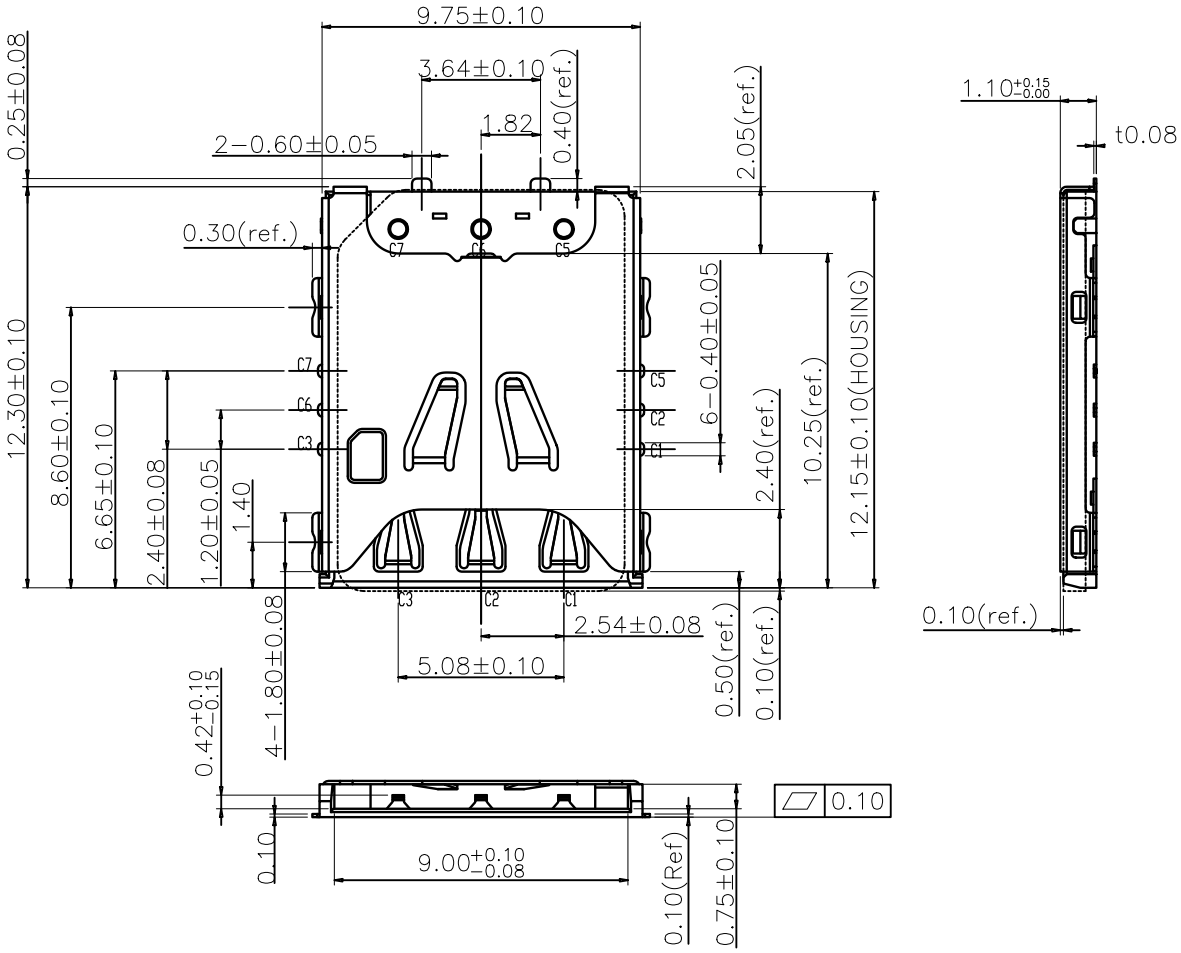

## MECHANICAL DRAWING (CONTINUED)

units: mm
PCB tolerance: ±0.05 mm

| PIN CONNECTIONS | | |
|---|---|---|
| PIN | SIGNAL NAME | DESCRIPTION |
| C1 | VCC | SUPPLY VOLTAGE |
| C2 | RST | RESETTING |
| C3 | CLK | CLOCK |
| C5 | GND | GROUND CONNECTION |
| C6 | VPP | PROGRAMMING VOLTAGE |
| C7 | I/O | DATA LINE |
| G1~G4 | | COVER GROUND |

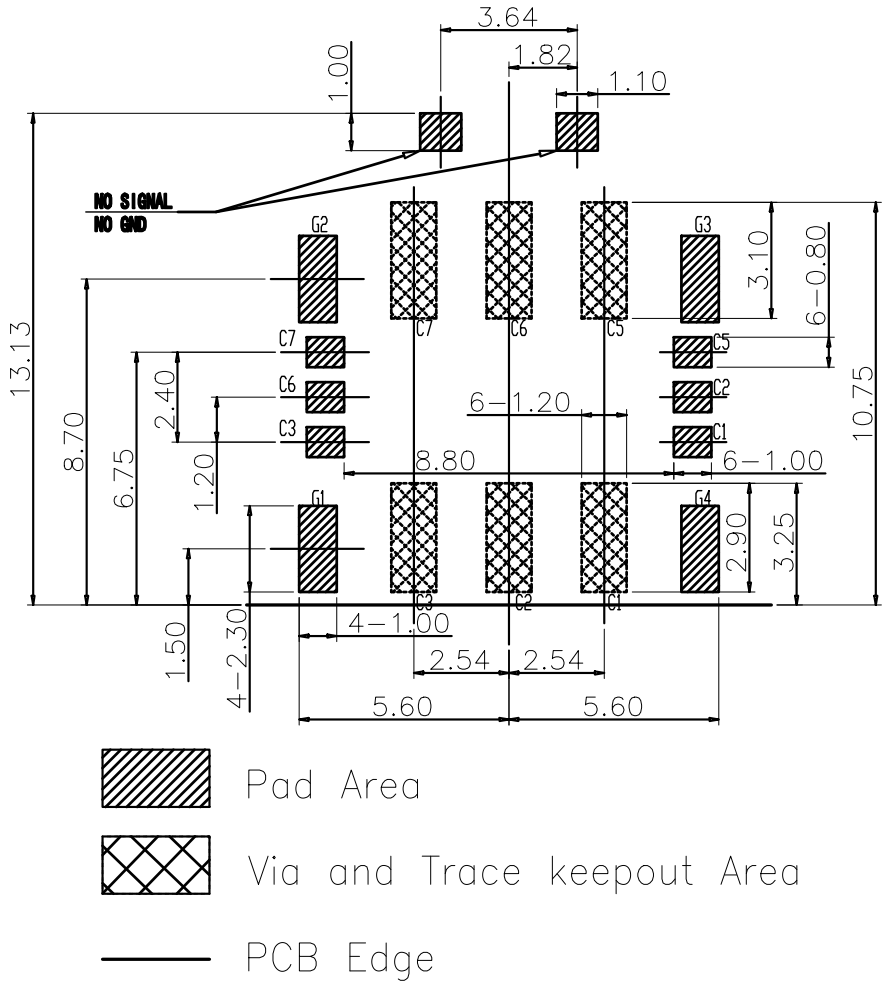


Recommended PCB Layout
Top View

## PACKAGING

units: mm

Reel Size: Ø330 mm
Reel QTY: 2,000 pcs per reel

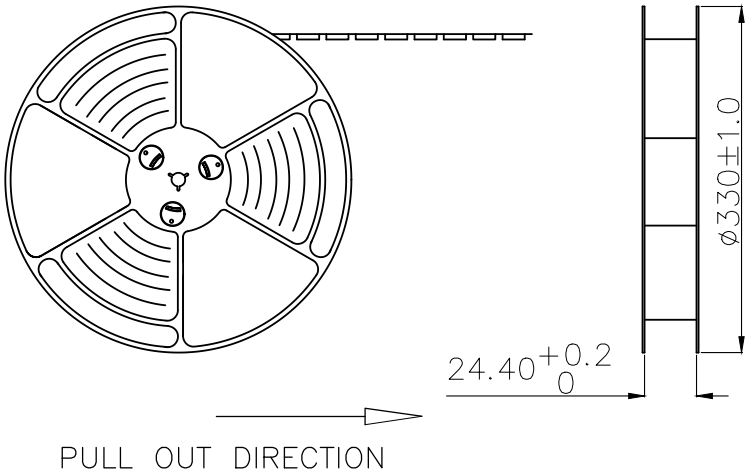


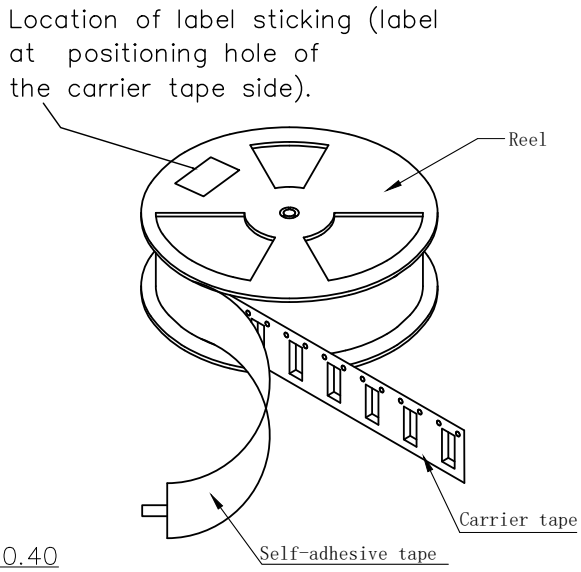


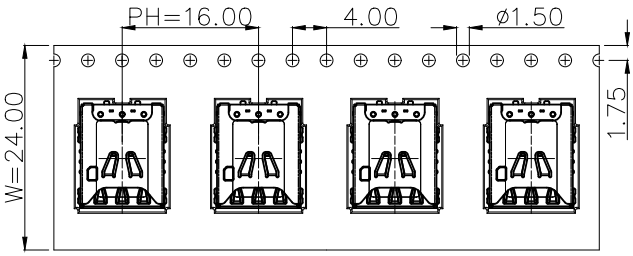


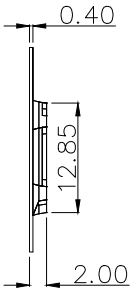

## REVISION HISTORY

| rev. | description | date |
|---|---|---|
| 1.0 | initial release | 10/14/2026 |

The revision history provided is for informational purposes only and is believed to be accurate.

Same Sky offers a one (1) year limited warranty. Complete warranty information is listed on our website.

Same Sky reserves the right to make changes to the product at any time without notice. Information provided by Same Sky is believed to be accurate and reliable. However, no responsibility is assumed by Same Sky for its use, nor for any infringements of patents or other rights of third parties which may result from its use.

Same Sky products are not authorized or warranted for use as critical components in equipment that requires an extremely high level of reliability. A critical component is any component of a life support device or system whose failure to perform can be reasonably expected to cause the failure of the life support device or system, or to affect its safety or effectiveness.