CUI Devices is now Same Sky! Learn More

MODEL: MSD4-4-A | DESCRIPTION: MICRO SD 4.0 CARD CONNECTOR

FEATURES

- micro SD 4.0 card connector
- 18 pins
- push In / auto eject out
- surface mount
- 1.45 mm profile

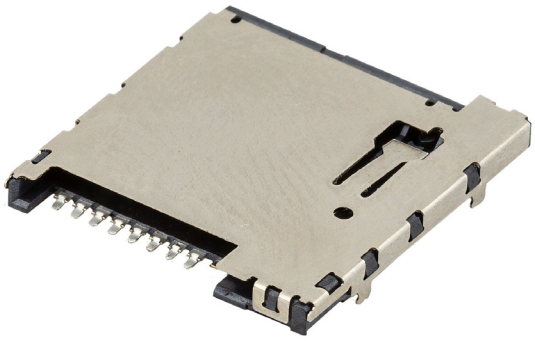

SPECIFICATIONS

parameter	conditions/description	min	typ	max	units
rated voltage				5	V
rated current				0.5	A
contact resistance[1]				100	mΩ
insulation resistance	at 500 Vdc, between adjacent circuits	1,000			MΩ
voltage withstand	for 1 minute, between adjacent circuits		500		Vac
insertion force				40	N
withdrawal force		0.5		40	N
life			5,000		cycles
operating temperature		-25		85	°C
flammability rating	UL94V-0				
RoHS	yes				

Note: 1. When measured at 20 mV / 100 mA.

SOLDERABILITY

parameter	conditions/description	min	typ	max	units
reel storage	at relative humidity 40~70% reel opened: use within 1 month reel unopened: up to 15 month shelf life	16	22	28	°C
reflow soldering	see reflow profile			250	°C

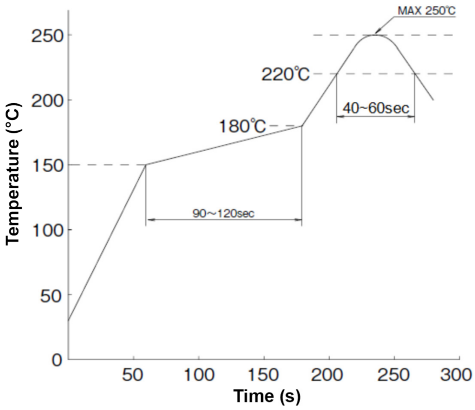

MECHANICAL DRAWING

units: mm
tolerance:
X.X ±0.35 mm
X.XX ±0.25 mm
X.XXX ±0.10 mm
PCB: ±0.05 mm
unless otherwise specified

DESCRIPTION	MATERIAL	PLATING/COLOR
housing	LCP 475 (UL94V-0)	black
contact terminals	copper alloy	contact area: 1 µ" gold over 50 µ" nickel solder area: 100 µ" matte tin over 50 µ" nickel
cover	stainless steel	30 µ" nickel
slider	PA9T (UL94V-0)	black

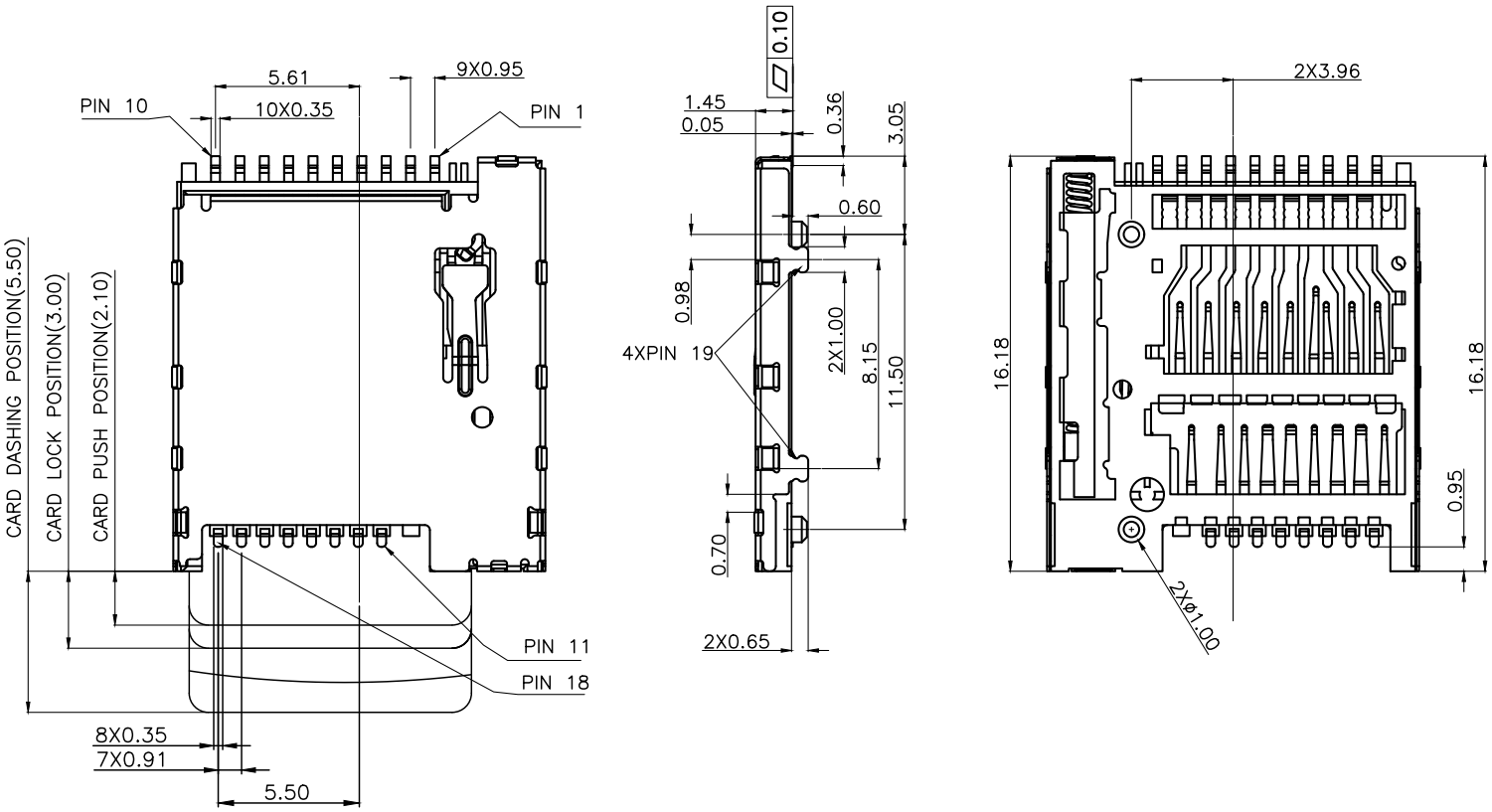

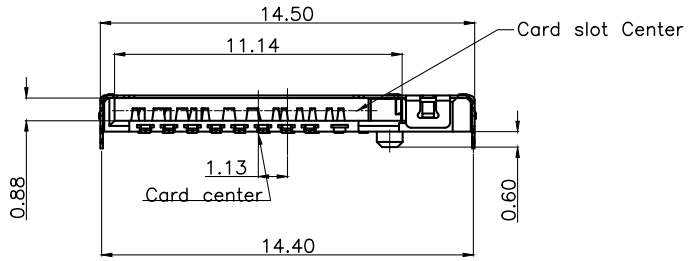

MECHANICAL DRAWING (CONTINUED)

units: mm
PCB tolerance: ±0.05 mm

PIN CONNECTIONS				
CONNECTOR PIN#	MSD CARD PIN#	SIGNAL NAME	TYPE	DESCRIPTION
P1	P9	VDD2	S	SUPPLY VOLTAGE (1.8 V)
P2	P1	DAT2	I/O	DATA LINE (BIT 2)
P3	P2	CD/DAT3	I/O	CARD DETECT/DATA LINE (BIT 3)
P4	P3	CMD	I/O	COMMAND/RESPONSE
P5	P4	VDD1	S	SUPPLY VOLTAGE (3.3 V)
P6	P5	CLK	I	CLOCK
P7		CD	---	---
P8	P6	VSS	S	SUPPLY VOLTAGE GROUND
P9	P7	DAT0/RCLK+	I/O	DATA LINE (BIT 0)/RCLK+
P10	P8	DAT1/RCLK-	I/O	DATA LINE (BIT 1)/RCLK-
P11	P17	SWIO	I	SINGLE WIRE PROTOCOL INTERFACE
P12	P10	VSS	S	SUPPLY VOLTAGE GROUND
P13	P11	D0+	I/O	UHS-II D0+
P14	P12	D0-	I/O	UHS-II D0-
P15	P13	VSS	S	SUPPLY VOLTAGE GROUND
P16	P14	D1-	I/O	UHS-II D1-
P17	P15	D1+	I/O	UHS-II D1+
P18	P16	VSS	S	SUPPLY VOLTAGE GROUND
P19	GND	---	GND	---

CARD STATUS	
WITHOUT CARD	CARD INSERTED
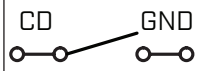	

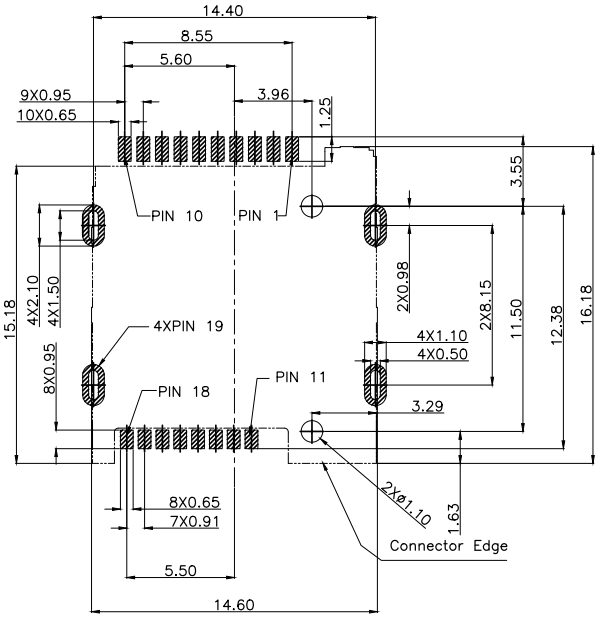

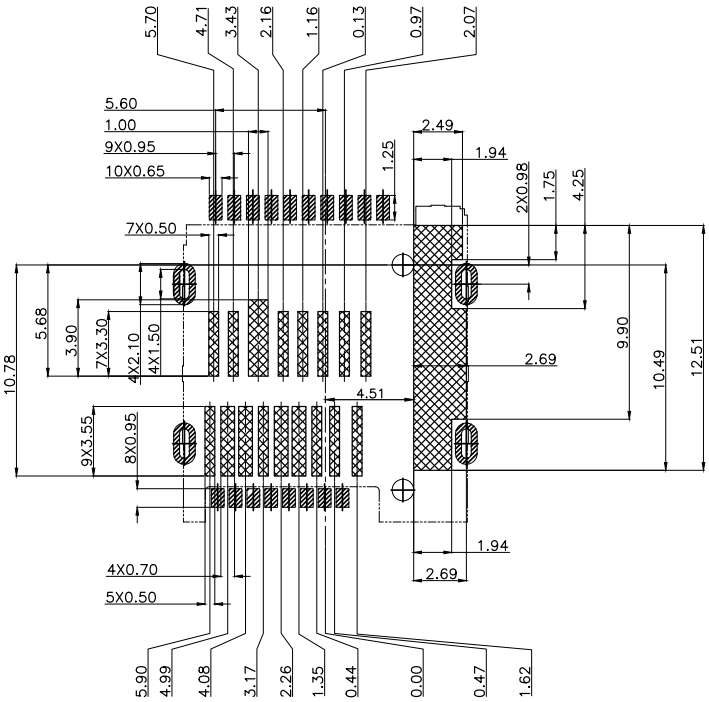

PAD

No trace,No test point,
No via hole,No ground area

Recommended PCB Layout
Top View

PACKAGING

units: mm

Reel Size: Ø330 mm
Reel QTY: 800 pcs per reel

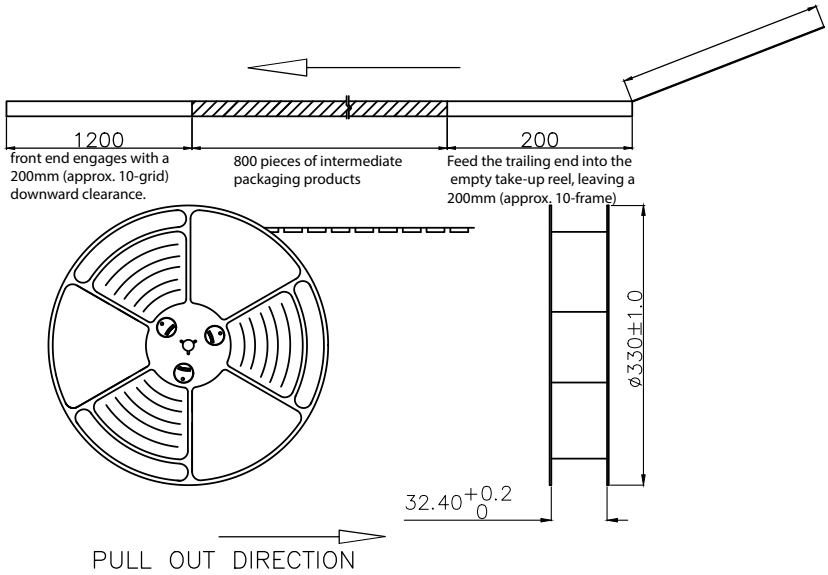

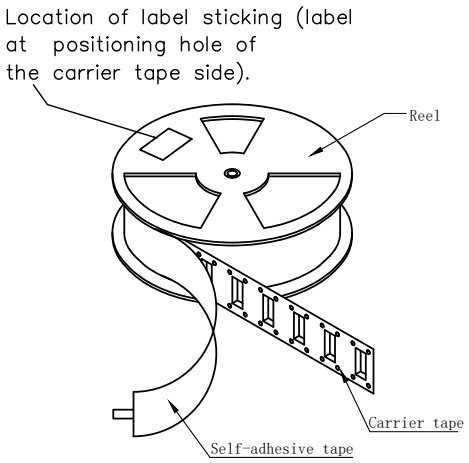

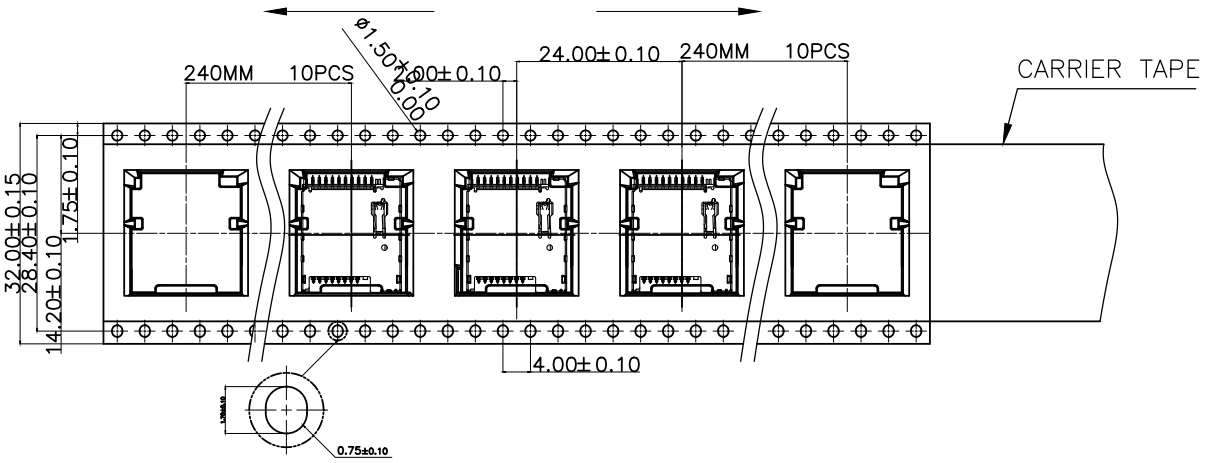

REVISION HISTORY

rev.	description	date
1.0	initial release	10/06/2026

The revision history provided is for informational purposes only and is believed to be accurate.

Same Sky offers a one (1) year limited warranty. Complete warranty information is listed on our website.

Same Sky reserves the right to make changes to the product at any time without notice. Information provided by Same Sky is believed to be accurate and reliable. However, no responsibility is assumed by Same Sky for its use, nor for any infringements of patents or other rights of third parties which may result from its use.

Same Sky products are not authorized or warranted for use as critical components in equipment that requires an extremely high level of reliability. A critical component is any component of a life support device or system whose failure to perform can be reasonably expected to cause the failure of the life support device or system, or to affect its safety or effectiveness.