CUI Devices is now Same Sky! Learn More



# MODEL: CMI-1240-SMT | DESCRIPTION: PIEZO BUZZER INDICATOR

## FEATURES

- low current
- washable
- internally driven

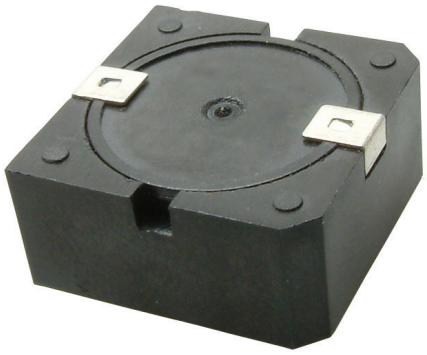

## SPECIFICATIONS

| parameter | conditions/description | min | typ | max | units |
|---|---|---|---|---|---|
| rated voltage | | | 12 | | Vdc |
| operating voltage | | 3 | | 16 | Vdc |
| current consumption | at rated voltage | | | 18 | mA |
| rated frequency | | 3,800 | 4,000 | 4,200 | Hz |
| tone | continuous | | | | |
| sound pressure level | at 10 cm, rated voltage | 90 | | | dB |
| dimensions | 16.9 x 16.9 x 7.8 | | | | mm |
| weight | | | | 3.2 | g |
| material | PPS UL-94 V-0 (black) | | | | |
| terminal | SMT type (Au plating) | | | | |
| operating temperature | | -30 | | 70 | °C |
| storage temperature | | -40 | | 80 | °C |
| RoHS | yes | | | | |

Notes: 1. All specifications measured at 5~35°C, humidity at 45~85%, under 86~106 kPa pressure, unless otherwise noted.
2. Add suffix "-TR" to the model number for tape & reel packaging, otherwise packaging will be in tubes.

## SOLDERABILITY

| parameter | conditions/description | min | typ | max | units |
|---|---|---|---|---|---|
| reel storage | at relative humidty <60% | | | 30 | °C |
| reflow soldering[3] | see recommended reflow soldering profile | | | 260 | °C |
| drying conditions[4] | bake at 40°C for 24 hours | | | | |

Note: 3. It is recommended to reflow solder within 48 hours from opening vacuum packaging at a temperature <30°C & relative humidity <60%.
4. When out of packaging for more than 48 hours.
5. Not to exceed 1 reflow cycle.

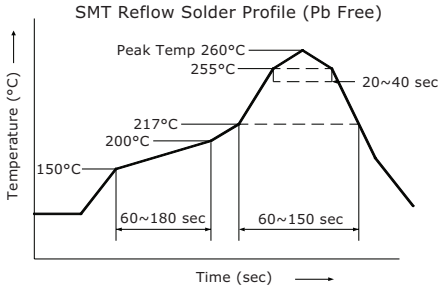

## MECHANICAL DRAWING

units: mm
tolerance: ±0.5 mm

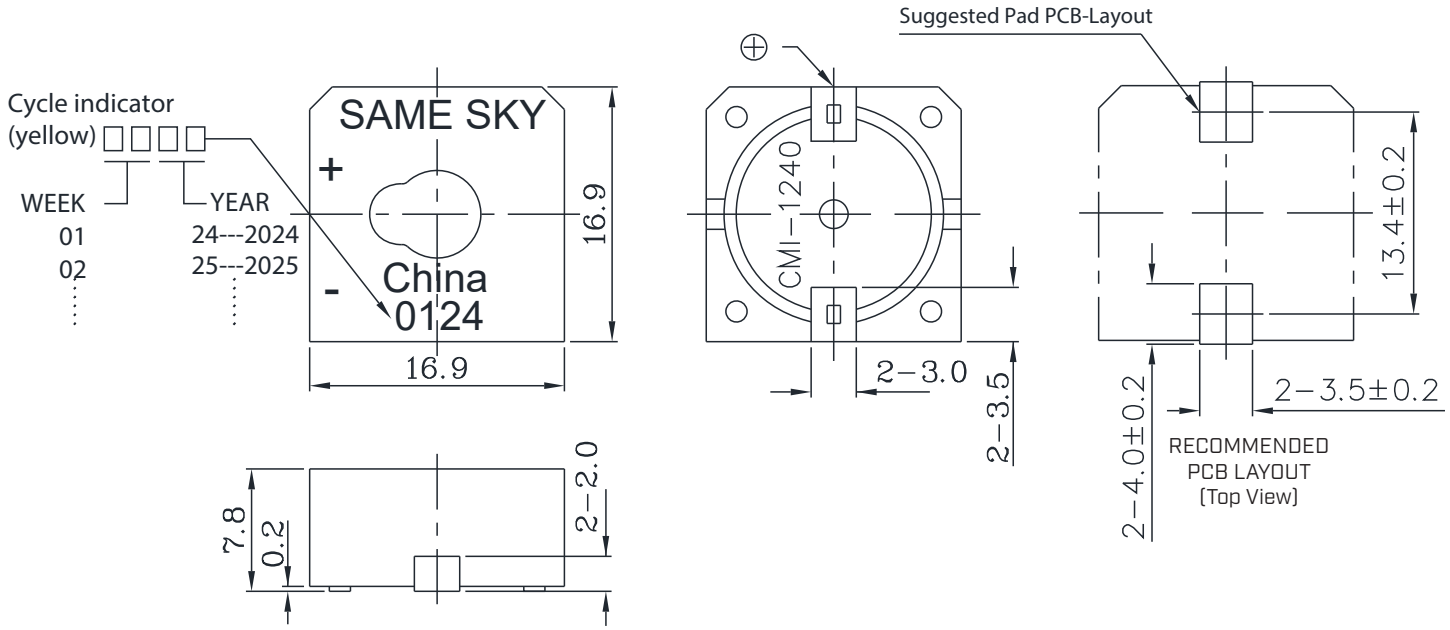


## PERFORMANCE CURVES

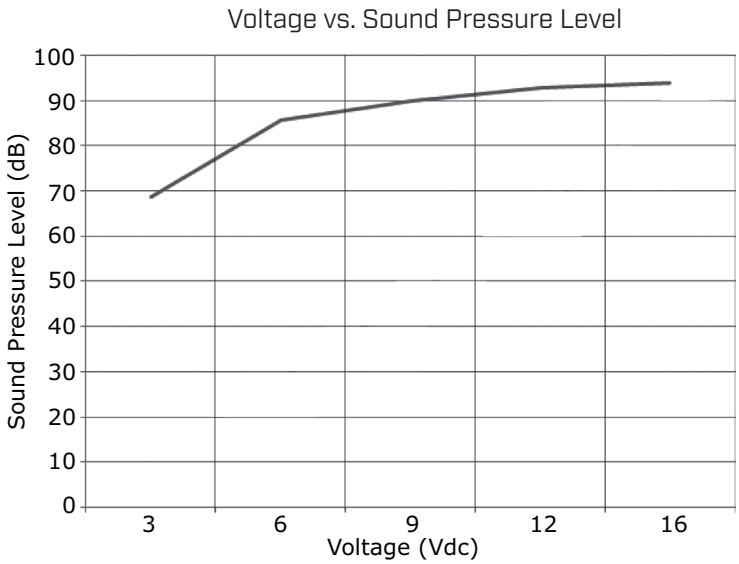


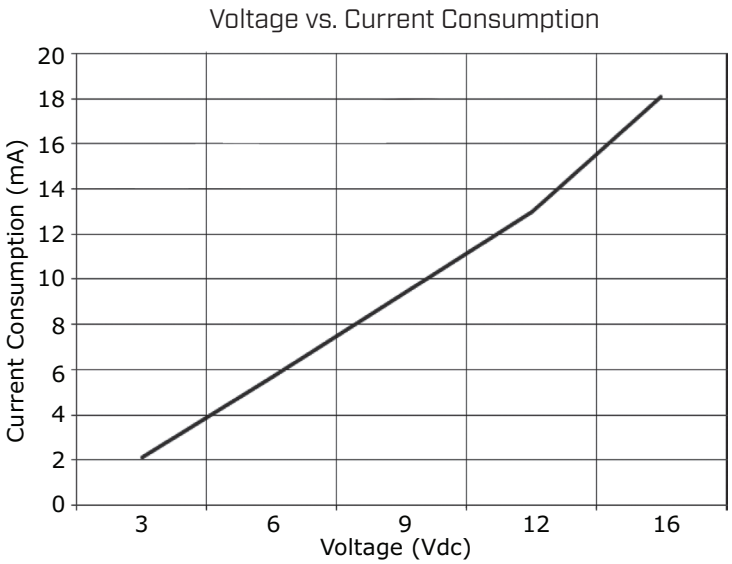

# PACKAGING (TUBE)

units: mm

Tube Size: 450 x 18.6 x 9.7 mm
Six Tube Size: 450 x 37.2 x 29.1 mm
Carton Size: 540 x 190 x 100 mm
Tube QTY: 20 pcs per tube
Six Tube QTY: 120 pcs per six tube
Carton QTY: 1,200 pcs per carton

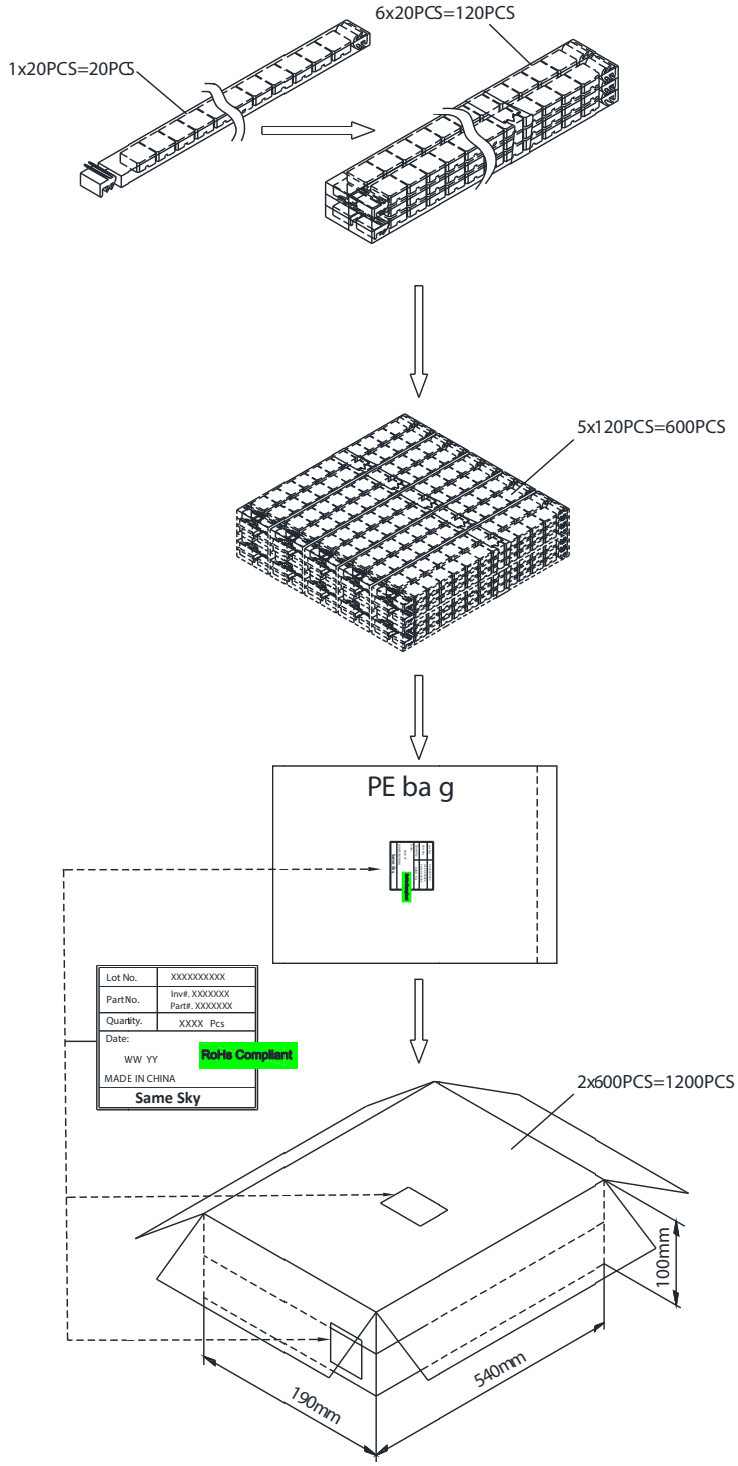

## PACKAGING (TAPE & REEL)

units: mm

Reel Size: Ø330 mm
Carton Size: 349 x 177 x 359 mm
Reel QTY: 320 pcs per reel
Carton QTY: 1,280 pcs per carton

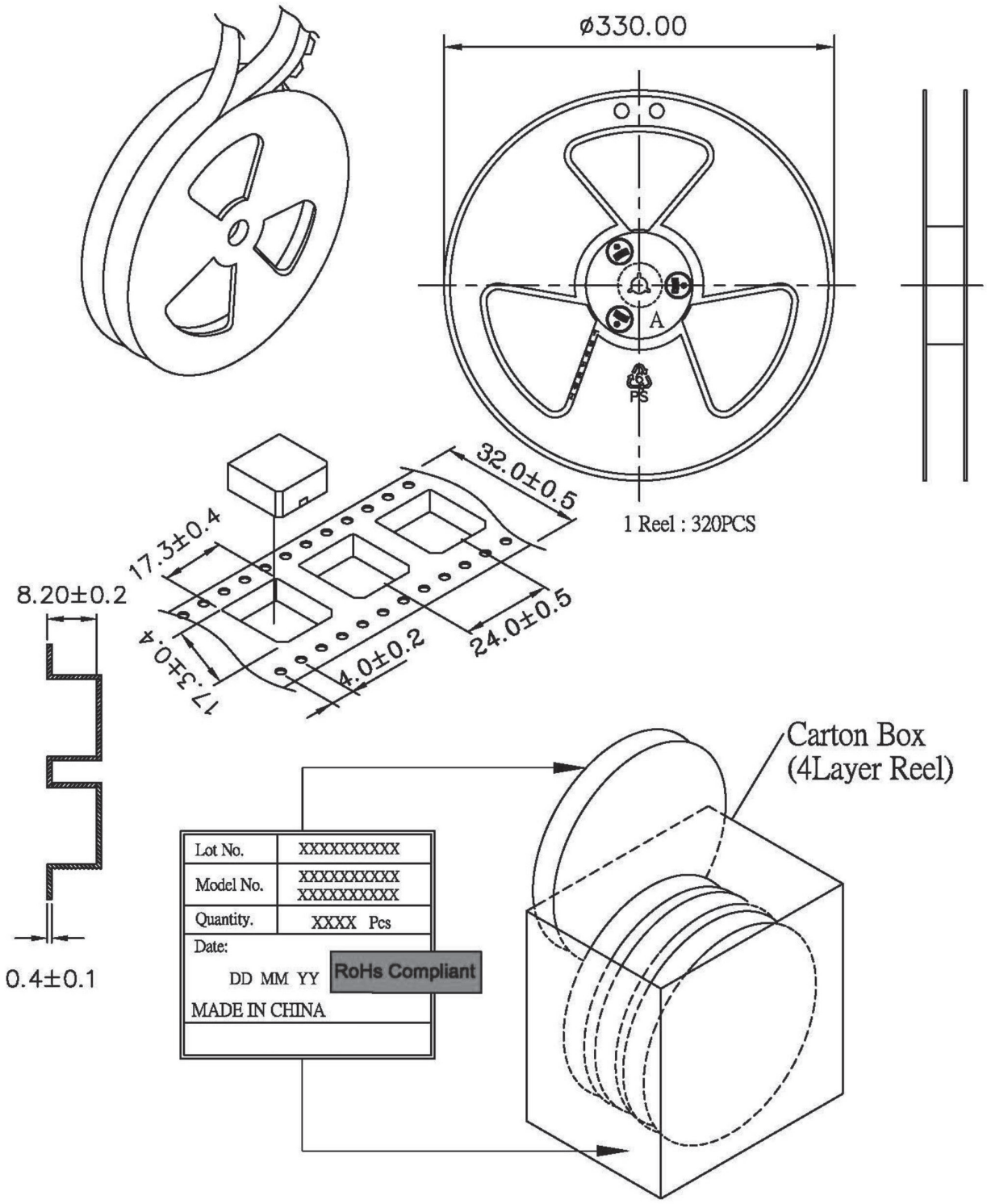

## REVISION HISTORY

| rev. | description | date |
|---|---|---|
| 1.0 | initial release | 06/03/2005 |
| 1.01 | updated part number, applied new spec template | 05/13/2013 |
| 1.02 | internal IC changed | 06/29/2017 |
| 1.03 | voltage range adjusted | 09/28/2017 |
| 1.04 | added storage and drying conditions, added TR package option | 11/30/2018 |
| 1.05 | brand update | 01/07/2020 |
| 1.06 | logo, datasheet style update | 08/05/2022 |
| 1.07 | CUI Devices rebranded to Same Sky | 09/11/2024 |
| 1.08 | changed tube packaging | 10/23/2024 |
| 1.09 | changed tube packaging | 01/29/2026 |

The revision history provided is for informational purposes only and is believed to be accurate.

Same Sky offers a one (1) year limited warranty. Complete warranty information is listed on our website.

Same Sky reserves the right to make changes to the product at any time without notice. Information provided by Same Sky is believed to be accurate and reliable. However, no responsibility is assumed by Same Sky for its use, nor for any infringements of patents or other rights of third parties which may result from its use.

Same Sky products are not authorized or warranted for use as critical components in equipment that requires an extremely high level of reliability. A critical component is any component of a life support device or system whose failure to perform can be reasonably expected to cause the failure of the life support device or system, or to affect its safety or effectiveness.