CUI Devices is now Same Sky! Learn More

MODEL: CDS-15158-SMT | DESCRIPTION: SPEAKER

FEATURES

- SMT (surface mount) speaker
- reflow solder capable
- compact size

RoHS

SPECIFICATIONS

parameter	conditions/description	min	typ	max	units
input power	maximum power: IEC-60268-5, filter 60s on/120s off, 10 cycles at room temp		0.3	0.5	W
impedance	at 1.0 kHz, 1.0 V	6.8	8	9.2	Ω
resonant frequency (Fo)	at 1.0 V	680	850	1,020	Hz
frequency response		Fo		20,000	Hz
sound pressure level	at 0.3 W, 0.1 m ave, at 1.0, 1.2, 1.5, 2.0 kHz	84	87	90	dB
distortion	at 2.0 kHz, 0.3 W			5	%
buzz, rattle, etc.	must be normal at sine wave between Fo ~ 20 kHz		1.55		V
dimensions	15 x 15 x 5.0				mm
magnet	Sm_2Co_{17}, Ø8.0 x 1.0 mm				
material	LCP				
cone material	PI				
terminal	surface mount, Au plating				
weight			2.1		g
operating temperature		-40		85	°C
storage temperature		-40		85	°C
washable	yes				
RoHS	yes				

Notes:
1. All specifications measured at 5~35°C, humidity at 45~85%, under 86~106kPa pressure, unless otherwise noted.
2. Add suffix "-TR" to the model for tape and reel packaging.

SOLDERABILITY

parameter	conditions/description	min	typ	max	units
reflow soldering	see reflow profile			260	°C

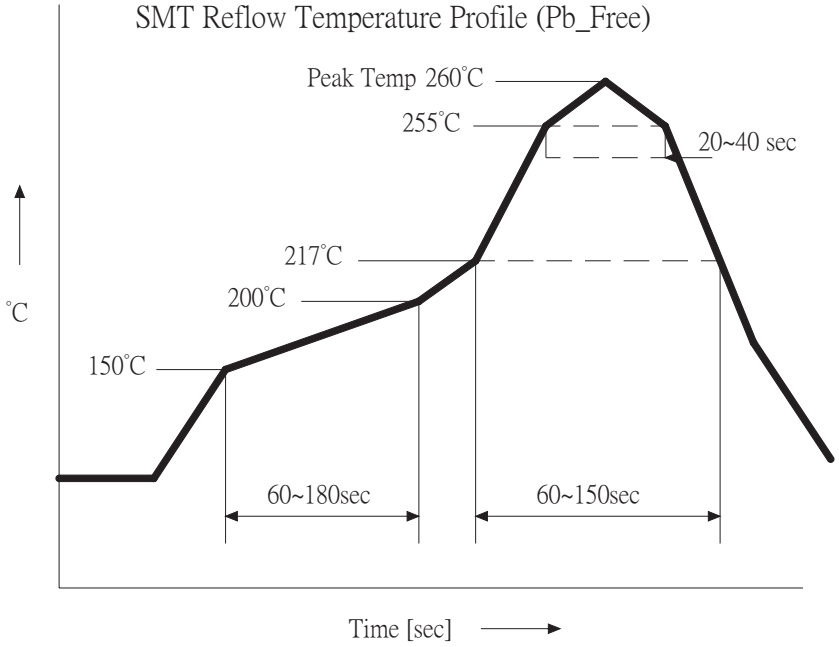

MECHANICAL DRAWING

units: mm
tolerance: ±0.5 mm

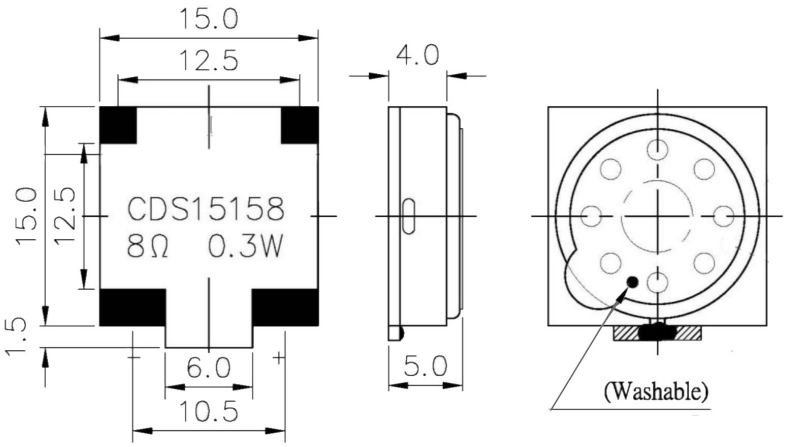

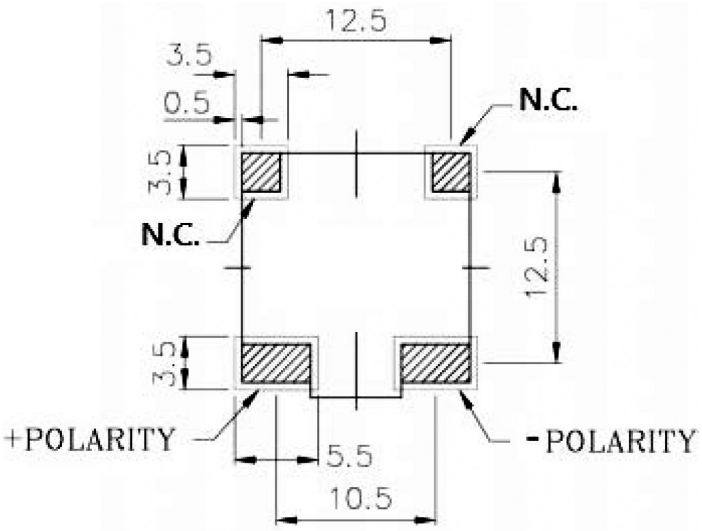

RECOMMENDED PCB LAYOUT
TOP VIEW

RESPONSE CURVES

Frequency Response Curve

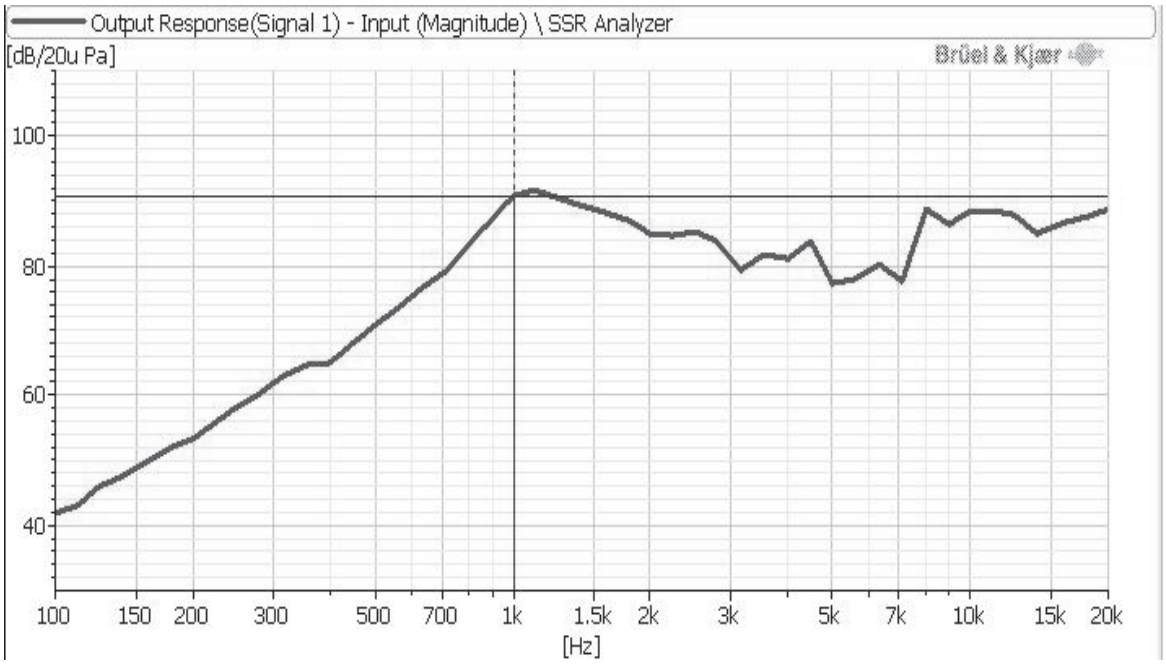

Total Harmonic Distortion Curve

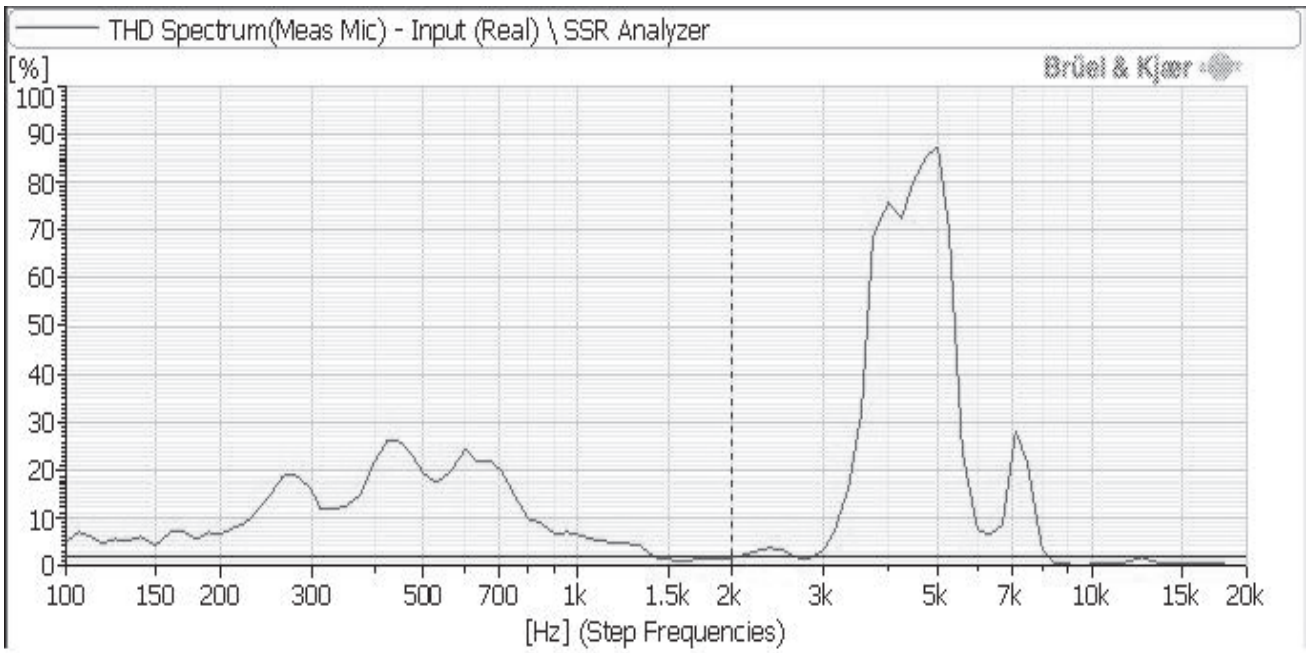

THIELE-SMALL PARAMETERS

parameter	conditions/description	typ
Mechanical Q Factor	Qms	7.0053
Electrical Q Factor	Qes	30.5312
Total Q Factor	Qts	5.6979
Compliance Equivalent Volume	Vas	0.0001

Notes: 2. Results represent typical performance in Free Air conditions.

PACKAGING

units: mm

Reel Size: Ø330
Carton Size: 170 x 340 x 340 mm
Reel QTY: 600 pcs per reel
Carton QTY: 3,000 pcs per carton

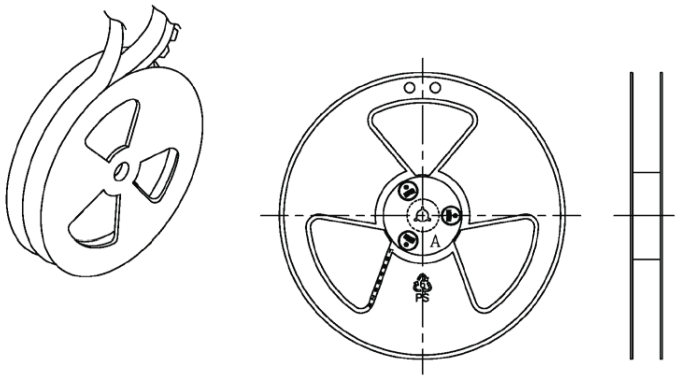

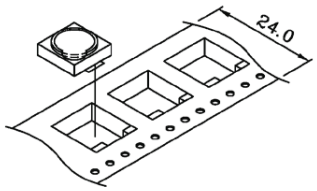

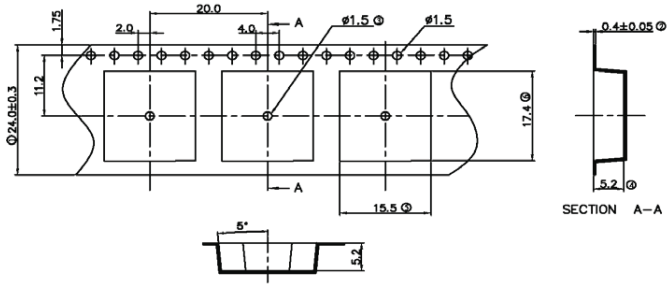

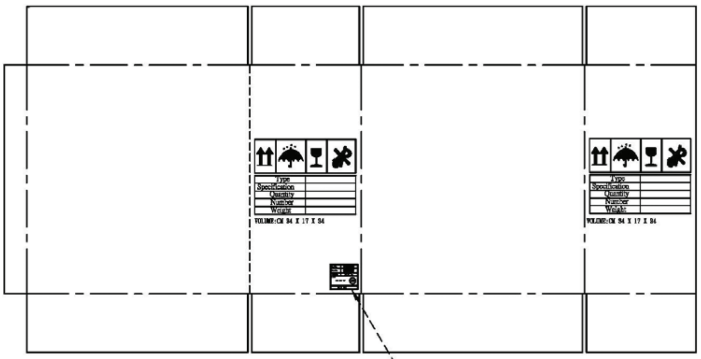

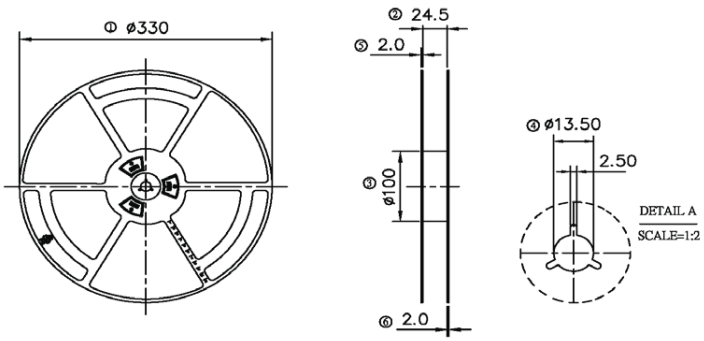

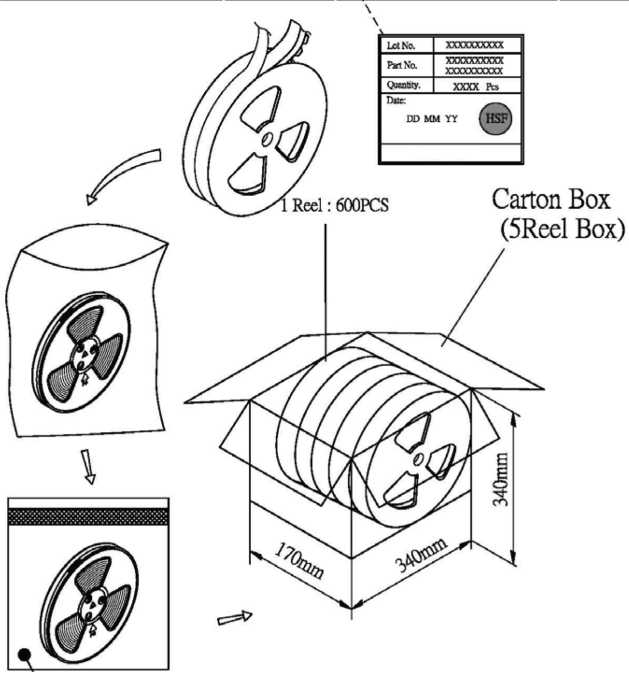

REVISION HISTORY

rev.	description	date
1.0	initial release	03/12/2015
1.01	added packaging details	06/19/2017
1.02	brand update	01/20/2020
1.03	logo, datasheet style update	08/05/2022
1.04	CUI Devices rebranded to Same Sky	09/11/2024
1.05	added Thiele-Small Parameters	02/07/2025
1.06	updated cone material	07/20/2026

The revision history provided is for informational purposes only and is believed to be accurate.

Same Sky offers a one (1) year limited warranty. Complete warranty information is listed on our website.

Same Sky reserves the right to make changes to the product at any time without notice. Information provided by Same Sky is believed to be accurate and reliable. However, no responsibility is assumed by Same Sky for its use, nor for any infringements of patents or other rights of third parties which may result from its use.

Same Sky products are not authorized or warranted for use as critical components in equipment that requires an extremely high level of reliability. A critical component is any component of a life support device or system whose failure to perform can be reasonably expected to cause the failure of the life support device or system, or to affect its safety or effectiveness.