CUI Devices is now Same Sky! Learn More

MODEL: CPT-9019S-SMT-TR | DESCRIPTION: PIEZO BUZZER TRANSDUCER

FEATURES

- externally driven
- low profile
- SMT

SPECIFICATIONS

parameter	conditions/description	min	typ	max	units
operating voltage				25	Vp-p
current consumption	at 3 Vp-p, 4,000 Hz square wave			5	mA
rated frequency			4,000		Hz
sound pressure level	at 10 cm, 3 Vp-p, 4,000 Hz square wave	65			dB
electrostatic capacity	at 100 Hz/1 V	8,400	12,000	15,600	pF
dimensions	9.0 x 9.0 x 1.9				mm
weight				0.2	g
material	LCP				
terminal	SMT type (Sn plating)				
operating temperature		-30		70	°C
storage temperature		-40		85	°C
RoHS	yes				

Notes: 1. All specifications measured at 5~35°C, humidity at 45~85%, under 86~106 kPa pressure, unless otherwise noted.

SOLDERABILITY

parameter	conditions/description	min	typ	max	units
reel storage	at relative humidty <40%			25	°C
reflow soldering[2]	see recommended reflow soldering profile			260	°C
drying conditions[3]	bake at 40°C for 24 hours				

Note: 2. It is recommended to reflow solder within 48 hours from opening vacuum packaging at a temperature <30°C & relative humidity <60%.
3. When out of packaging for more than 48 hours.

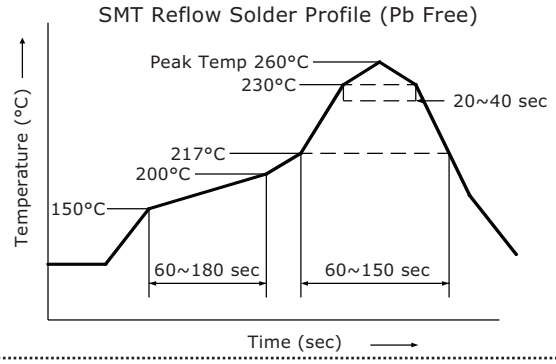

MECHANICAL DRAWING

units: mm
tolerance: ±0.5 mm

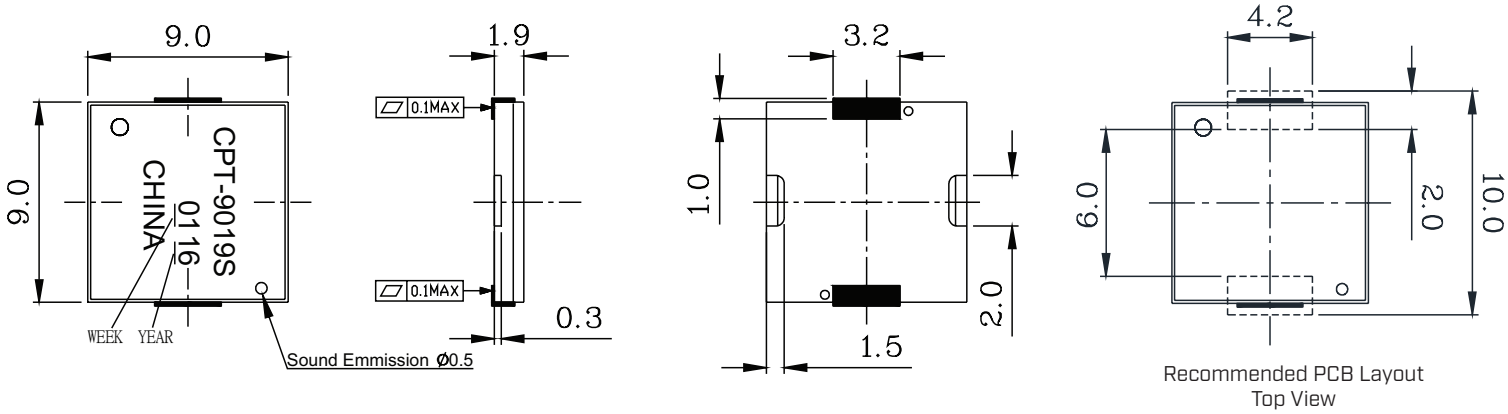

FREQUENCY RESPONSE CURVE

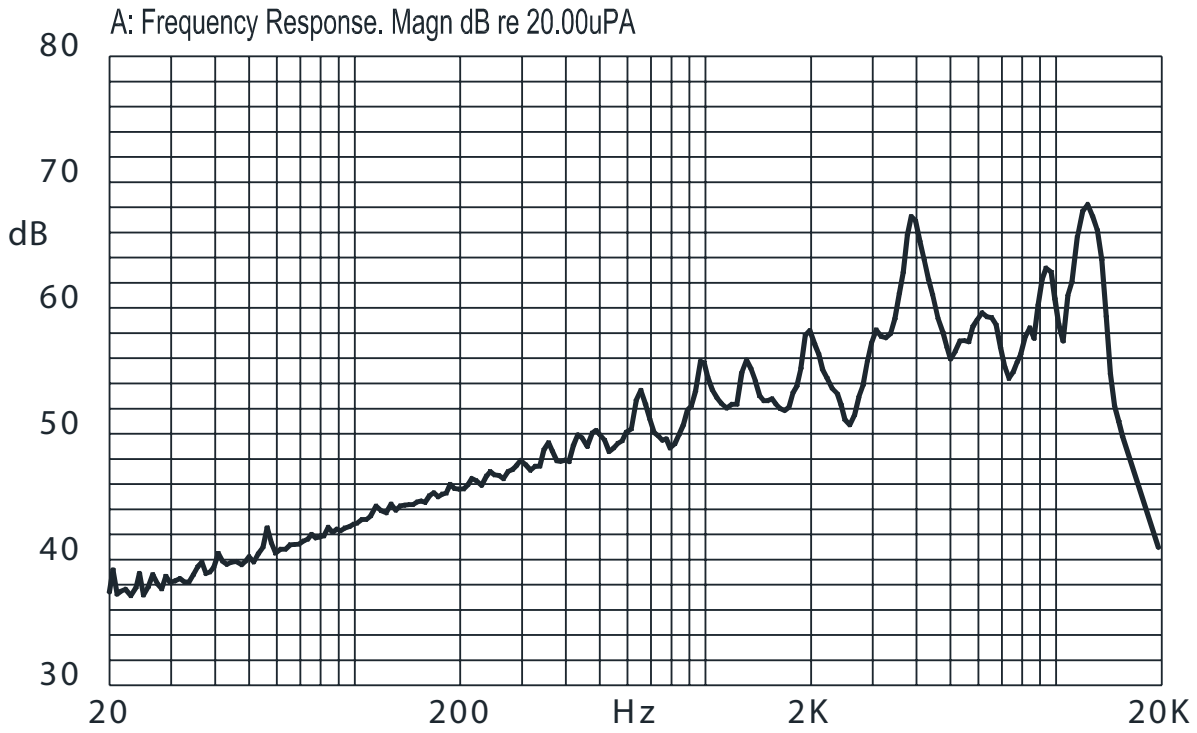

PACKAGING

units: mm

Reel Size: Ø330 mm
Carton Size: 175 x 355 x 350 mm
Reel QTY: 2,000 pcs per reel
Carton QTY: 10,000 pcs per carton

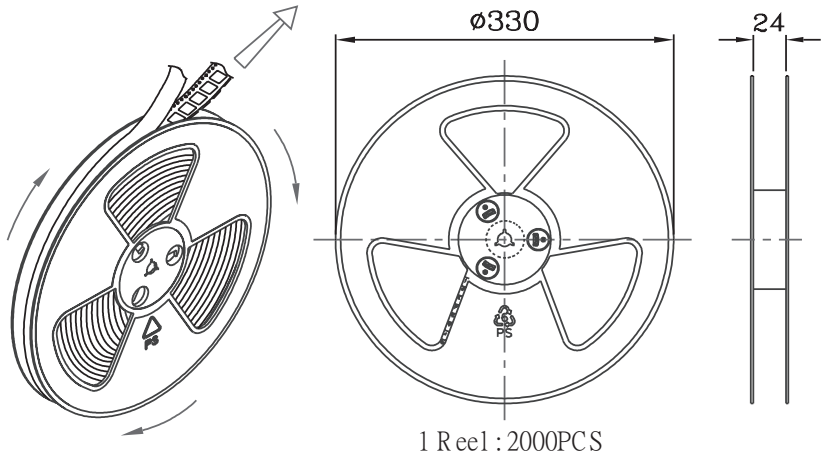

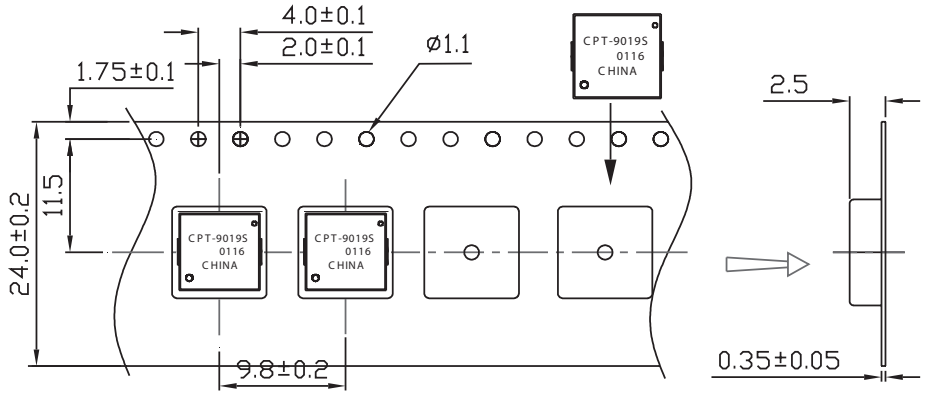

Lot No.	XXXXXXXXXX
Model No.	XXXXXXXXXX
Quantity.	XXXX Pcs
Date: DD MM YY MADE IN CHINA	G

The label is placed on the inner boxes and outer carton.

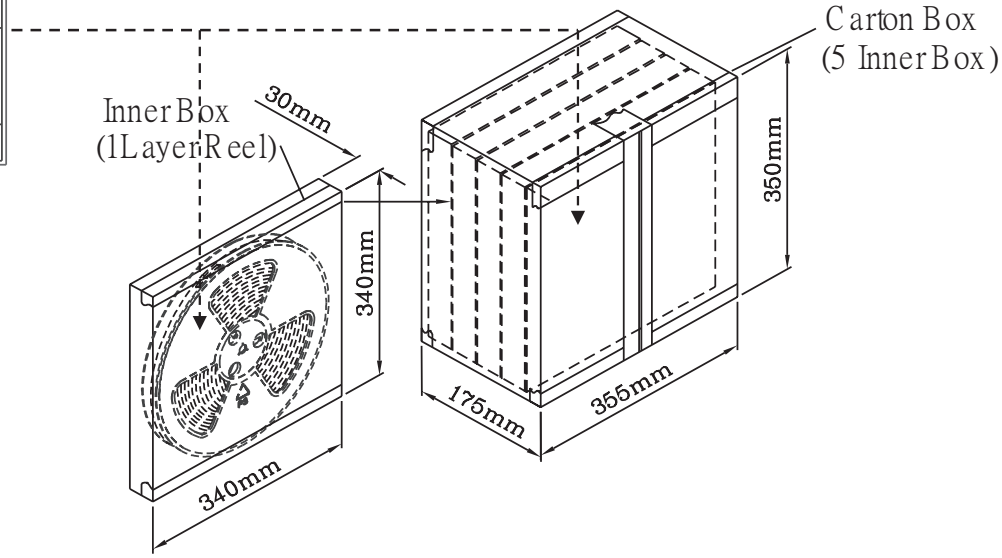

REVISION HISTORY

rev.	description	date
1.0	initial release	03/31/2016
1.01	added storage and drying conditions	07/29/2019
1.02	brand update	12/05/2019
1.03	logo, datasheet style update	08/05/2022
1.04	CUI Devices rebranded to Same Sky	09/11/2024

The revision history provided is for informational purposes only and is believed to be accurate.

Same Sky offers a one (1) year limited warranty. Complete warranty information is listed on our website.

Same Sky reserves the right to make changes to the product at any time without notice. Information provided by Same Sky is believed to be accurate and reliable. However, no responsibility is assumed by Same Sky for its use, nor for any infringements of patents or other rights of third parties which may result from its use.

Same Sky products are not authorized or warranted for use as critical components in equipment that requires an extremely high level of reliability. A critical component is any component of a life support device or system whose failure to perform can be reasonably expected to cause the failure of the life support device or system, or to affect its safety or effectiveness.