CUI Devices is now Same Sky! Learn More

SERIES: CPM814 | DESCRIPTION: M8 FIELD ASSEMBLY CONNECTOR

FEATURES

- M8 female connector
- A code
- straight
- free hanging
- screw terminal

SPECIFICATIONS

parameter	conditions/description	min	typ	max	units
rated voltage				60	V
rated current				3	A
withstanding voltage			1,500		Vac
contact resistance				5	mΩ
insulation resistance	at 500 Vdc for 1 minute	100			MΩ
operating temperature		-40		80	°C
life		500			cycles
flammability rating	see material table				
RoHS	yes				
IP level	IP67 (in mated condition)				

PART NUMBER KEY

CPM814 - XXX - FST - M5 - 67

Base Number

No. of Poles:
03A = 3 (A-Coding)
04A = 4 (A-Coding)

MECHANICAL DRAWING

units: mm
tolerance:
≤10.0: ±0.1 mm
10.0<X≤20.0: ±0.20 mm
20.0<X≤50.0: ±0.50 mm
unless otherwise noted

DESCRIPTION	MATERIAL	PLATING/COLOR
housing	PA66 (UL94V-0)	black
terminals; female	copper	gold
housing; female	PA66 (UL94V-0)	black
nut	stainless steel	---
o-ring	NBR	black

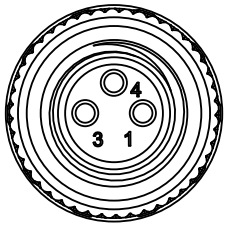

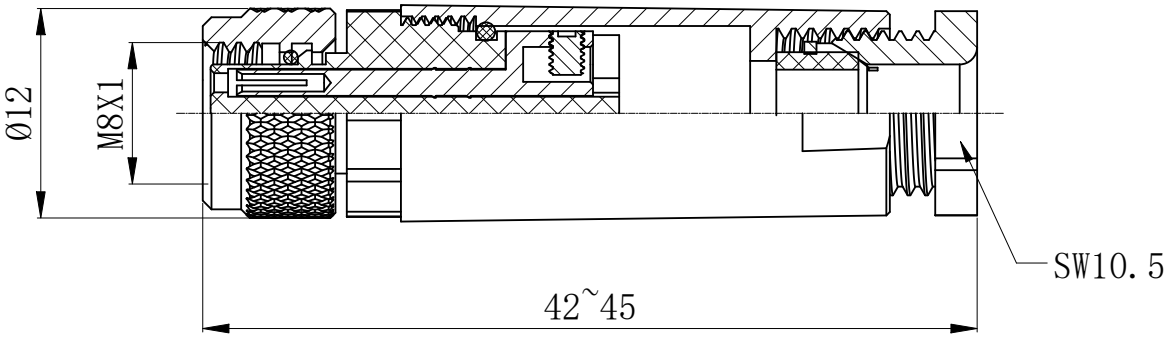

No. of Poles	3	4
Coding	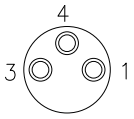 A-Coding	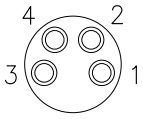 A-Coding
Wire Size	18 AWG	18 AWG
Suitable Cable	OD: Ø3.5~5 mm	OD: Ø3.5~5 mm

REVISION HISTORY

rev.	description	date
1.0	initial release	10/22/2026

The revision history provided is for informational purposes only and is believed to be accurate.

Same Sky offers a one (1) year limited warranty. Complete warranty information is listed on our website.

Same Sky reserves the right to make changes to the product at any time without notice. Information provided by Same Sky is believed to be accurate and reliable. However, no responsibility is assumed by Same Sky for its use, nor for any infringements of patents or other rights of third parties which may result from its use.

Same Sky products are not authorized or warranted for use as critical components in equipment that requires an extremely high level of reliability. A critical component is any component of a life support device or system whose failure to perform can be reasonably expected to cause the failure of the life support device or system, or to affect its safety or effectiveness.