CUI Devices is now Same Sky! Learn More

MODEL: UJ32-21-C-H-G3-MHMT-H2-P24-TR-X7 | DESCRIPTION: USB RECEPTACLE

FEATURES

- USB Type C receptacle
- USB 3.2 Gen 2x1
- 10 Gbit/s data transfer speed
- IPX7
- reflow solder compatible (including o-ring)
- tape & reel packaging

SPECIFICATIONS

parameter	conditions/description	min	typ	max	units
USB standard	USB 3.2 Gen 2x1				
rated input voltage				20	Vdc
rated input current	as per EIA-364-70, Method B power pins collectively (A1, A4, A9, A12, B1, B4, B9, B12) VCONN pins individually (A5, B5) all other signal pins individually			 5.0 1.25 0.25	 A A A
contact resistance[1]	between terminals and mating plug			40	mΩ
insulation resistance	at 250 Vdc between adjacent contacts	100			MΩ
voltage withstand	between adjacent contacts for 1 minute	100			Vac
insertion force	at a rate of 30 cycles/min	5		20	N
withdrawal force	at a rate of 30 cycles/min	8		20	N
life	at a rate of 500 cycles per hour		10,000		cycles
operating temperature		-40		80	°C
flammability rating	UL94V-0				
RoHS	yes				
IP level	IPX7				

Note: 1. When measured at 20 mV / 100 mA.

SOLDERABILITY

parameter	conditions/description	min	typ	max	units
reel storage	at 20~30°C, 40~75% humidity				
reflow soldering	see reflow profile			260	°C

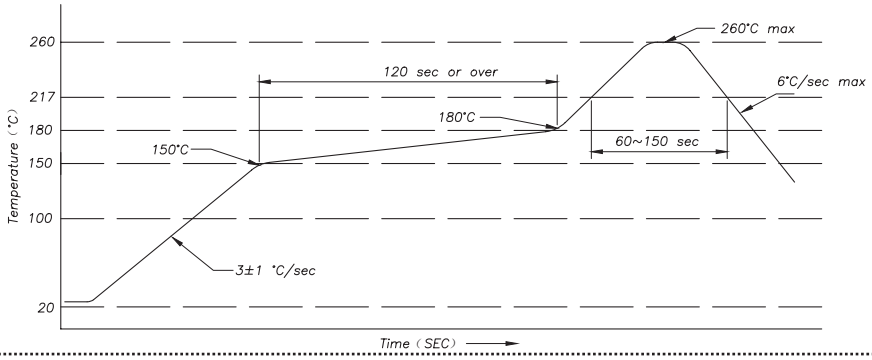

MECHANICAL DRAWING

units: mm
tolerance:
X.X ±0.30 mm
X.XX ±0.20 mm
X.XXX ±0.10 mm
unless otherwise specified

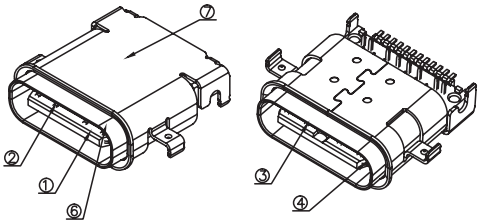

ITEM	DESCRIPTION	MATERIAL	PLATING/COLOR
1	housing	PA9T (UL94V-0)	black
2	contact 1	C7025 t=0.12 mm	contact area: 15 μ" gold over 20 μ" nickel solder area: gold flash over 20 μ" nickel
3	contact 2	C7025 t=0.12 mm	contact area: 15 μ" gold over 20 μ" nickel solder area: gold flash over 20 μ" nickel
4	mid plate	SUS301 t=0.15 mm	--
5	GND plate	SUS304 t=0.10 mm	20 μ" nickel
6	shell 1	SUS304 t=0.20 mm	20 μ" nickel
7	shell 2	SUS304 t=0.20 mm	20 μ" nickel
8	glue	epoxy	black
9	o-ring (OR-130)	silica gel	black

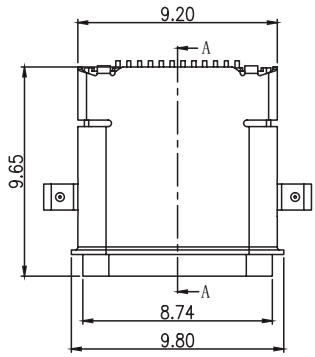

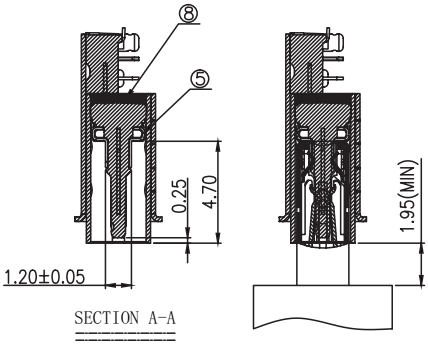

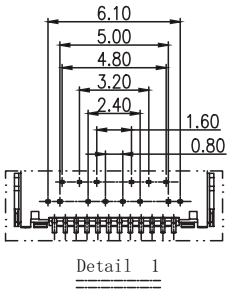

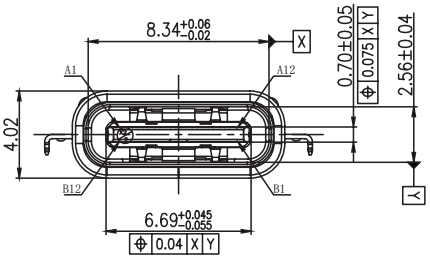

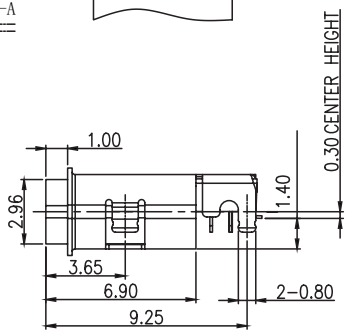

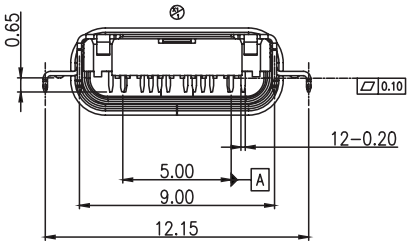

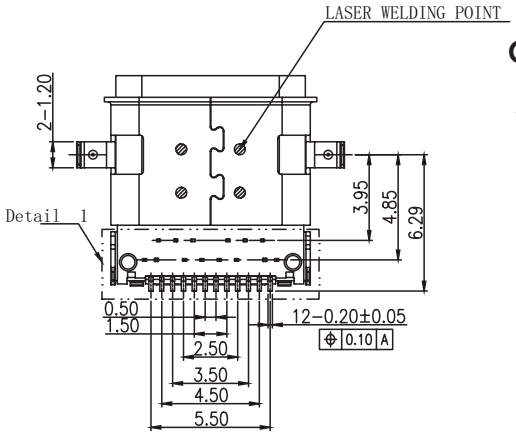

O-ring (P/N: OR-130)

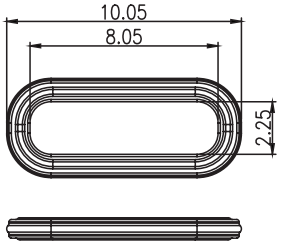

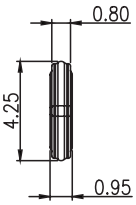

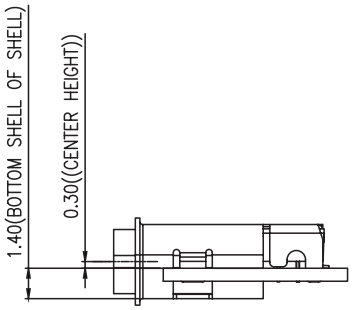

MECHANICAL DRAWING (CONTINUED)

units: mm
PCB tolerance: ±0.05 mm
PCB thickness: 0.60 mm

PIN CONNECTIONS					
PIN	SIGNAL NAME	MATING SEQUENCE	PIN	SIGNAL NAME	MATING SEQUENCE
A1	GND	FIRST	B12	GND	FIRST
A2	SSTXp1	SECOND	B11	SSRXp1	SECOND
A3	SSTXn1	SECOND	B10	SSRXn1	SECOND
A4	VBUS	FIRST	B9	VBUS	FIRST
A5	CC1	SECOND	B8	SBU2	SECOND
A6	Dp1	SECOND	B7	Dn2	SECOND
A7	Dn1	SECOND	B6	Dp2	SECOND
A8	SBU1	SECOND	B5	CC2	SECOND
A9	VBUS	FIRST	B4	VBUS	FIRST
A10	SSRXn2	SECOND	B3	SSTXn2	SECOND
A11	SSRXp2	SECOND	B2	SSTXp2	SECOND
A12	GND	FIRST	B1	GND	FIRST
SHELL		GND	SHELL		GND

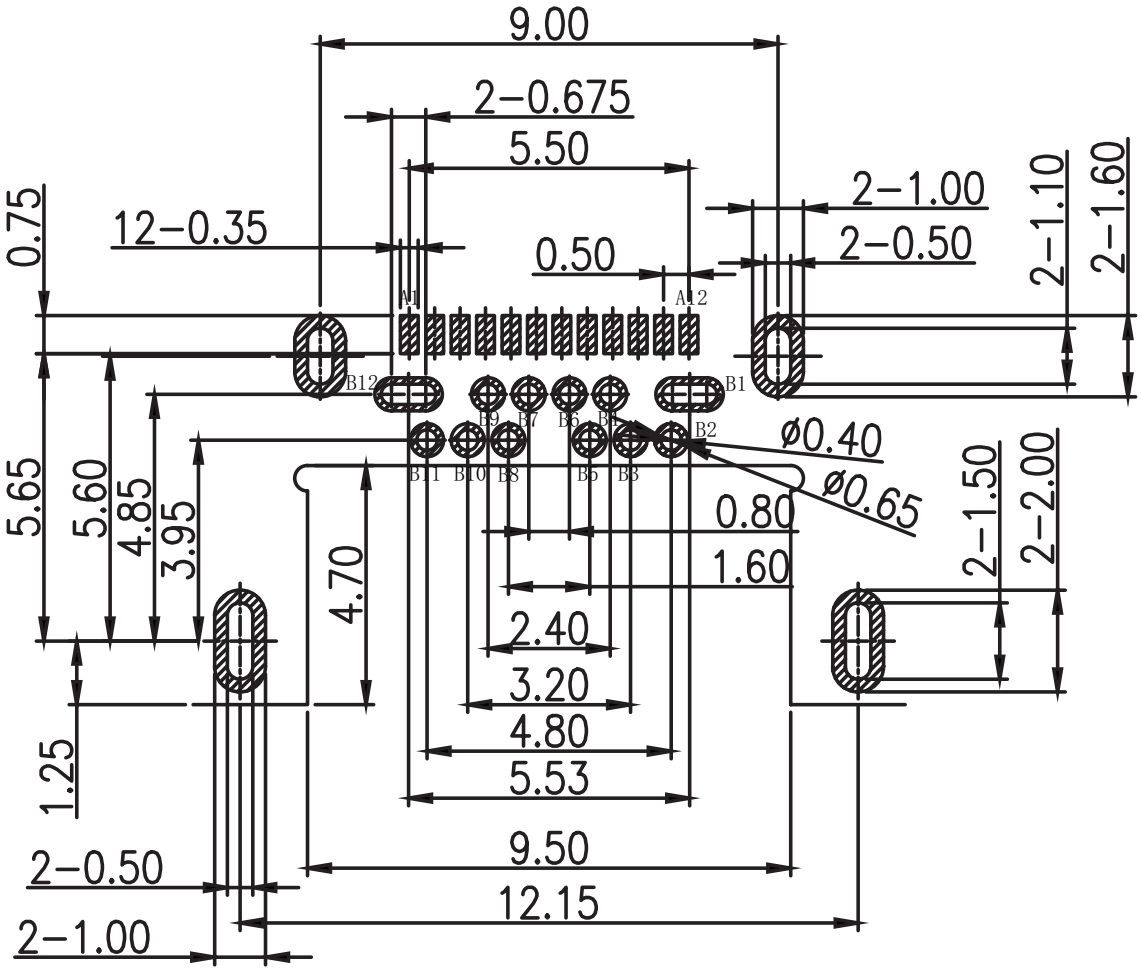

Recommended PCB Layout
Top View

ASSEMBLY REFERENCE

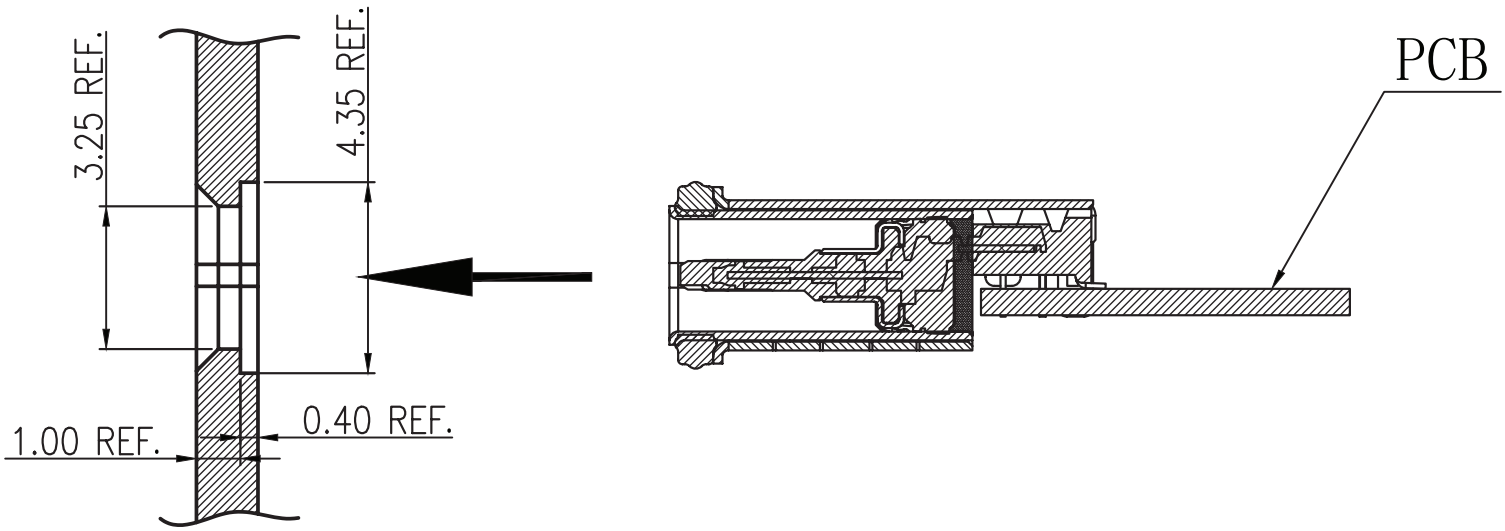

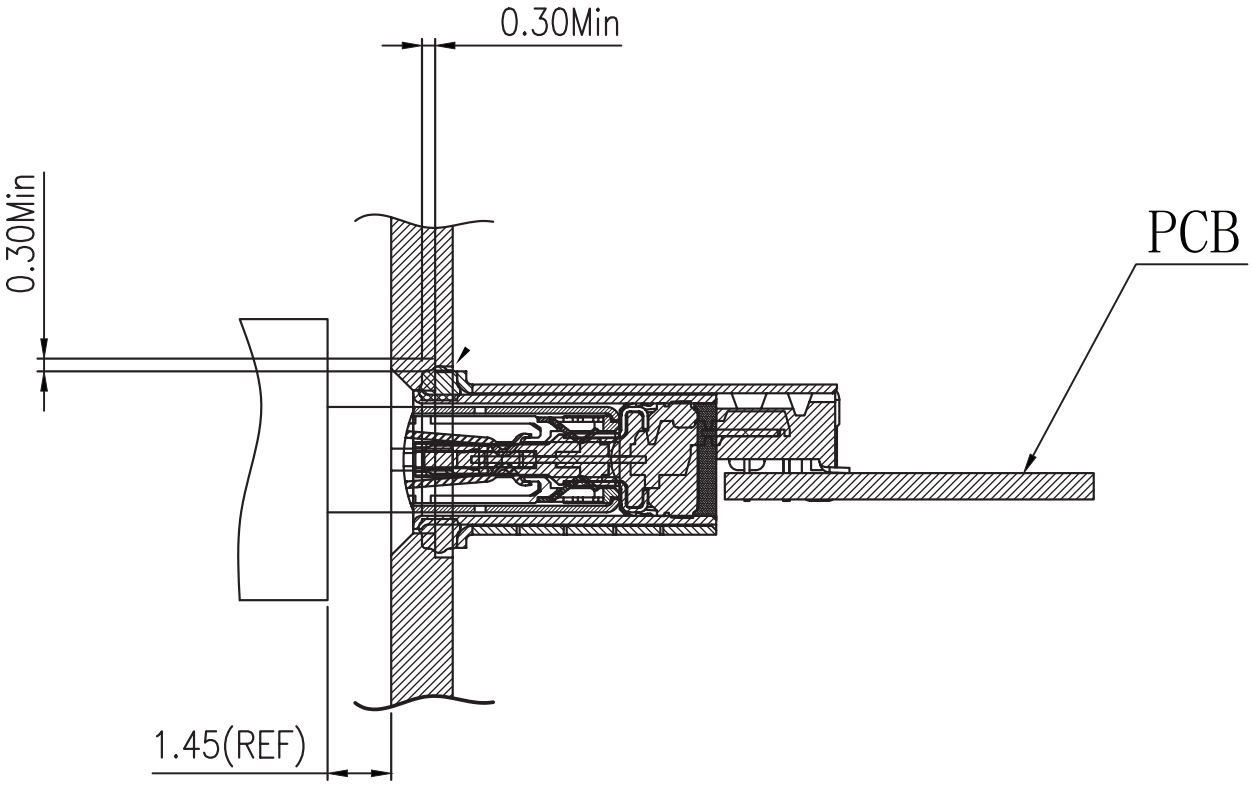

PACKAGING

units: mm

Reel Size: Ø330
Reel QTY: 700 pcs per reel
Carton Size: 350 x 340 x 310 mm
Carton QTY: 7,000 pcs

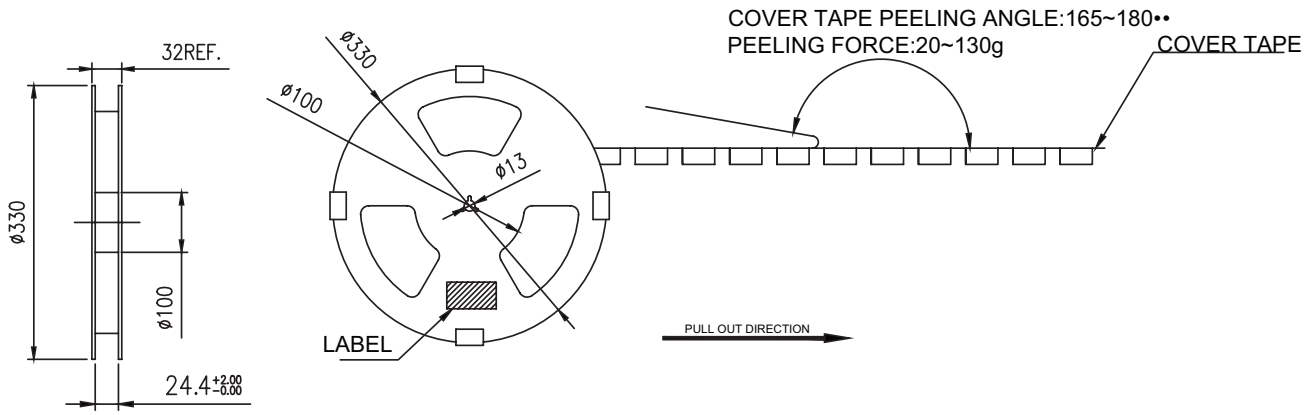

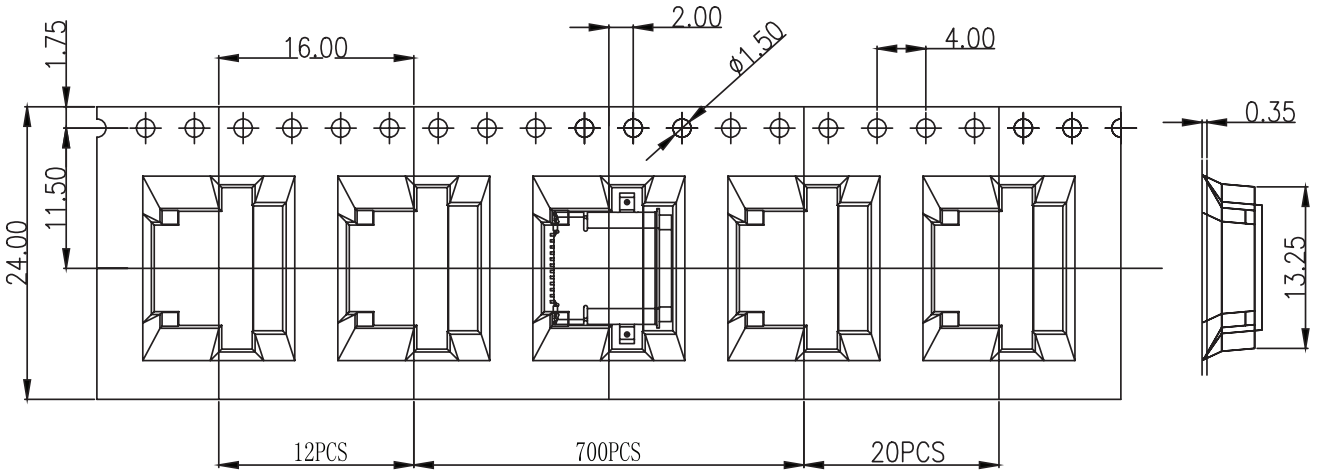

REVISION HISTORY

rev.	description	date
1.0	initial release	11/03/2025

The revision history provided is for informational purposes only and is believed to be accurate.

Same Sky offers a one (1) year limited warranty. Complete warranty information is listed on our website.

Same Sky reserves the right to make changes to the product at any time without notice. Information provided by Same Sky is believed to be accurate and reliable. However, no responsibility is assumed by Same Sky for its use, nor for any infringements of patents or other rights of third parties which may result from its use.

Same Sky products are not authorized or warranted for use as critical components in equipment that requires an extremely high level of reliability. A critical component is any component of a life support device or system whose failure to perform can be reasonably expected to cause the failure of the life support device or system, or to affect its safety or effectiveness.